PROLYTE
Feel. Fantastic.
Product
Catalogue
2022

By prioritising mutual respect and trust, Prolyte creates long-term relations with both its users and customers.

When this is all coming together Prolyte is your first step to start building great things. Prolyte is headquartered in Leek, the Netherlands, where the complex process of design, engineering and sales come together. Prolyte has manufacturing bases in Czech Republic, Italy and China, and warehouses in both the USA and Netherlands to provide stock and logistic facilities worldwide.

Completing the team effort is a network of distribution partners; Prolyte distributes products to over 50 geographical markets worldwide. It utilises its network of partners who not only supply but also endorse its products with impeccable customer service and outstanding technical support, enforcing Prolyte's reputation as a market leader for quality, safety and customer satisfaction.

You can find Prolyte products in installations, events and productions all over the world.
www.prolyte.com

Photo: Rigging Services, UK. Project Galleries Lafayette

Content of Truss Products

TUBE 9
E20D / E20V 10
H20LB 13
X30 SERIES 14
H30 SERIES 18
VERTO TRUSS 22
H40 SERIES 28
HEAVY-DUTY TRUSS 34
S36 SERIES 35
S36 PRT TRUSS 38
S52 SERIES 40
S66 SERIES 44
S100F TRUSS 46
BGR70 TRUSS 48
B100RV TRUSS 51
CATWALK TRUSS 54
M145RV - MAMMOTH TRUSS 56
CIRCULAR TRUSS 58
CANTILEVER LOAD 62
CORNERS 65
COUPLERS & ACCESSORIES 82
PROTRAC 98
TOWERS 100
RT - H30V 101
RT - S36V 103
RT - S52SV 105
RT - B100RV 107
MPT TOWER 109
HT TOWER 1114
ST TOWER 116
CT TOWER 123
DT TOWER 126
OUTDOOR ADVERTISING 131
LED/ VIDEO SCREEN 133

ROOF SYSTEM 140
ARC ROOF 145
ARC HT-ROOF 149
MINI FLAT ROOF 152
FLAT ROOF 153
CLT ROOF 157
MPT ROOF 161
ST ROOF 165
POLYGON XII ROOF 169
GIANT ARC ROOF 173
XXL ROOF 177
SPACE ROOF 181

DECK & BARRIER 188
HOIST 226
PROLYTE CAMPUS 247

Photo: © the Prolyte.

PROLYTE
Feel. Fantastic.

Prolyte Truss

Truss products are the building blocks of our industry. Prolyte has developed a broad range of trusses and the unique conical coupling system, CCS, suitable for a variety of applications from decorative solutions to intricate truss structures. Prolyte is capable of meeting all your truss needs, from a simple flown grid or exhibition booth to elaborate or composite structures prepared for high loading.

Safety first

Prolyte encompasses trusses and complementary corners and accessories; all designed and manufactured according to a strict philosophy that emphasizes safety by making high quality products in compliance with the strictest regulations and standards. Next to that, simplicity, ease-of-use and configuration flexibility guarantee user-friendly products designed for daily practice. Prolyte provides comprehensive data and offers expert guidance and training to promote the correct use and safe application of its truss systems.

The choice of professionals

Prolyte manufactures trusses with original, advanced designs based on the experience and feedback of a worldwide community of users. Your ideas and requirements are incorporated into the latest generation products to ensure the highest level of functionality, reliability and safety. User experiences and changing market demands are the source of continuous product improvement and inspiration to design new products. With an installed rental base throughout Europa and further, Prolyte is the choice of professionals.

Photo by Gerard Henninger: Stageco, project: Ziggo Dome, 538 Jingleball

Architectural truss

E series trusses provide the solution for systems integrators, retail installations and structures with a mainly decorative function. These trusses combine structural components with highly aesthetic looks.

Multipurpose truss

The multipurpose truss range comprises of the X30, H30 and H40 series, available in ladder, triangular and square profiles. The X30, H30 and H40 series are light-to-medium-duty truss systems designed for use in the installation, rental and exhibition markets. These trusses are strong, compact, exceptionally versatile, and have low self-weight. Assembly is fool proof due to the continuous webbing of the diagonals. The X and H series are differentiated by wall thickness of the main chords; 2 mm. for the X truss and 3mm. for the H truss. Although almost identical in appearance, H series trusses are up to 30% stronger, specifically on longer spans.

System applications

If you're looking for solutions for permanent or semi permanent installations, architectural set pieces, theatre sets, shop displays, studio grids, or showroom applications, the X series truss is your answer. The exceptional strength in relation to their relatively small dimensions of the X truss makes it the ideal solution for complex structures like displays or booths. The H series trusses are primarily designed for high-frequency users such as rental or exhibition companies, or for semi permanent installations in demanding circumstances like moving lighting rigs in discotheques, stage scenery elements or touring exhibition stands.

APPLICATION SCOPE

Application scope

	USE
AI-17	Health and safety requirements -lifting equipment / Netherlands
BGV C1 / GUV 6,15	Staging and Production Facilities for the Entertainment Industry / Germany
BS 7906-2	Code of practice for use of aluminium and steel trusses and towers / England
LOLER	Safe use of lifting equipment, lifting operations and lifting equipment regulations / England
NPR 8020-10	Entertainment-rigging-design factors of safety / Netherlands
TISE	The institution of Structural Engineers, Temporary Demountable structures, guidance on use, procurement and design / England
IGVW SQP1	Code of practice for event technology- Provision and Use of Truss Systems / Germany
	MANUFACTURING
ANSI E1.21	Temporary ground-supported overhead structures used to cover the stage and support equipment in the production of outdoor events
ANSI E1.2-2006	Entertainment Technology: Design, Manufacture and Use of Aluminium Trusses and Towers
CWA 15902-2	Lifting and Load-bearing Equipment for Stages and other Production Areas within the Entertainment Industry - Part 2: Specifications for design, manufacture and for use of aluminium and steel trusses and towers
BS 7905-2	Specification for design and manufacture of aluminium and steel trusses and towers
BS 8118	Structural use of Aluminium part 1 code of practice for design
DIN 1055 (all parts)	Design loads on buildings - all parts
DIN 18000-1	Steel structrures; design and construction
EN 13814	Temporary structures, fairground amusements, directives for dimensioning and construction
EN 10002-1	Metallic materials – Tensile testing – Part 1: Method of testing at ambient temperature
EN 10067:1997	Hot rolled bulb flats, Dimensions and tolerances on shape, dimensions and mass
EN 13155	Cranes-safety-non-fixed load lifting attachments
EN 1990	Eurocode 0 Basis of structural design
EN 1991 all parts	Eurocode 1 Actions on structures
EN 1999 all parts	Eurocode 9 design of Aluminium structures
EN 30042:1994	Arc welded joints in aluminium and its weldable alloys - Guidance on quality levels for imperfections.
EN ISO 3834-1 & 3	Quality requirements for welding - Fusion welding of metallic materials - Part 1: Guidelines for selection and use Part 3: Standard quality requirements
EN 292-1	Safety of machinery - Basic concepts, general principles for design - Part 1: Basic terminology, methodology
EN 292-2	Safety of machinery - Basic concepts, general principles for design - Part 2: Technical principles and specifications
EN 754 (all parts)	Aluminium and aluminium alloys - Cold drawn rod/bar and tube
EN 755 (all parts)	Aluminium and aluminium alloys - Extruded rod/bar, tube and profiles
EN 515:1993	Aluminium and aluminium alloys - Wrought products - Temper designations
EN 573 (all parts)	Aluminium and aluminium alloys - Chemical composition and form of wrought products
EN 10204:2004	Metallic products - Types of inspection documents
EN 1090-3	Execution of steel and aluminium structures-part 3 technical rules for execution of aluminium structures

T-48 Series

Single tube (48 x 3 mm) with welded connectors offer a range of possibilities out of the ordinary. As extension, drop arm, drape weight; the possibilities are endless. The tubes use the same CCS6 connection as the trusses. Some tubes are fitted with a clamp – offering extra options for use. Single tubes are not rated with any loading capacity.

T-48-OE•••OE

Non Spigoted

T-48-CC•••CC

With 2 x CCS6

T-48-ST•••ST

With Stabilized Coupler

Technical Specifications - T-48 Series

Type	Tube
Alloy	EN AW 6082 T6
Main Chords	48 x 3 mm
Diagonal Members	16 x 2 mm
Coupling System	CCS6

Structural data can be found at www.prolyte.com

T-48 Series - Standard available Lengths and Codes

Metres	Feet	Code	Code	Code
0.25/1.00 m in 5 mm steps	0.82'/3.28', in 0.2' steps			
0,50	1.64	T-48-OE050OE	T-48-CC050CC	T-48-ST050ST
1,00	3.28	T-48-OE100OE	T-48-CC100CC	T-48-ST100ST
1,50	4.92	T-48-OE150OE	T-48-CC150CC	T-48-ST150ST
2,00	6.56	T-48-OE200OE	T-48-CC200CC	T-48-ST200ST
2,50	8.20	T-48-OE250OE	T-48-CC250CC	\
3,00	9.84	T-48-OE300OE	T-48-CC300CC	\
4,00	13.12	T-48-OE400OE	T-48-CC450CC	\

Photo: Le Creuset GmbH, Germany. Project: Messe Leipzig.

Designed as a lightweight, light-duty truss system with a mainly decorative function, the E20 Series is a small and aesthetically pleasing truss that can be used for structural purposes as well. Compact construction, optimum strength and high-tech appearance make this truss an appropriate decorative element with numerous applications. E20 Series is available in triangular and square.

Coupling system: CCS4

E20D

Top View

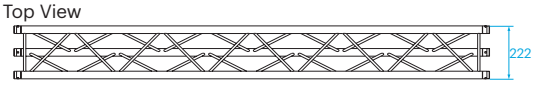

Side View

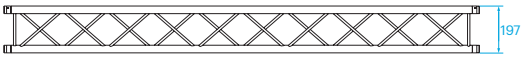

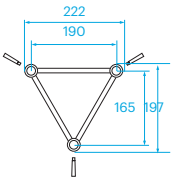

E20V

Top View

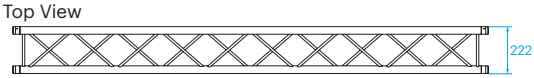

Side View

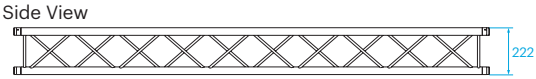

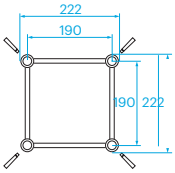

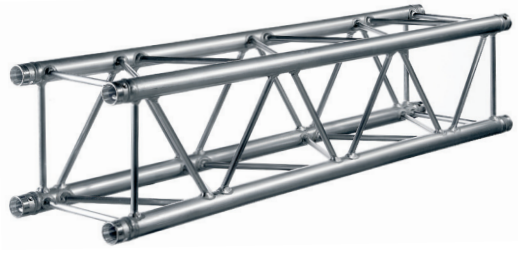

E20D - Allowable Loading

SPAN		Uniformly Distributed Load UDL		DEFLECTION		MAXIMUM ALLOWABLE POINT LOADS Centre Point Load CPL		DEFLECTION		Single Load Third Points Load per Point TPL		Single Load Fourth Points Load per Point QPL		Single Load Fifth Points Load per Point FPL		SPAN
m	ft	kg/m	lbs/ft	mm	inch	kgs	lbs	mm	inch	kgs	lbs	kgs	lbs	kgs	lbs	total weight
3	9,8	97,2	65,4	10	0,4	125,9	277,8	8	0,3	88,4	195,1	67,6	149,1	53,7	118,4	4,8
4	13,1	54,0	36,4	18	0,7	96,7	213,5	14	0,6	69,0	152,4	51,0	112,7	41,0	90,6	6,4
5	16,4	34,1	22,9	28	1,1	78,0	172,1	22	0,9	56,3	124,2	40,7	89,8	33,0	72,8	8,0
6	19,7	23,2	15,6	40	1,6	64,8	142,9	32	1,3	47,1	104,1	33,6	74,1	27,3	60,3	9,6
7	23,0	16,7	11,2	54	2,1	54,9	121,1	43	1,7	40,3	88,9	28,3	62,4	23,1	51,1	11,2
8	26,2	12,4	8,4	71	2,8	47,2	104,1	56	2,2	34,8	76,9	24,2	53,4	19,9	43,9	12,8
9	29,5	9,5	6,4	89	3,5	40,9	90,3	71	2,8	30,4	67,2	20,9	46,2	17,3	38,1	14,4
10	32,8	7,4	5,0	110	4,3	35,7	78,9	88	3,5	26,8	59,1	18,2	40,2	15,1	33,3	16,0
11	36,1	5,9	4,0	133	5,3	31,3	69,1	107	4,2	23,6	52,1	15,9	35,2	13,2	29,2	17,6
12	39,4	4,7	3,2	159	6,2	27,5	60,7	127	5,0	20,9	46,1	14,0	30,8	11,6	25,6	19,0
13	42,6	3,8	2,6	186	7,3	24,1	53,3	149	5,9	18,4	40,7	12,2	27,0	10,2	22,5	20,6
14	45,9	3,1	2,1	216	8,5	21,1	46,6	173	6,8	16,2	35,8	10,7	23,6	8,9	19,7	22,2
15	49,2	2,5	1,7	248	9,8	18,4	40,6	199	7,8	14,1	31,1	9,3	20,5	7,8	17,2	23,8
16	52,5	2,0	1,4	282	11,1	15,9	35,2	226	8,9	12,2	26,9	8,0	17,7	6,8	14,9	25,4
17	55,8	1,6	1,1	319	12,5	13,7	30,2	255	10,0	10,4	23,0	6,9	15,2	5,8	12,8	27,0
18	59,0	1,3	0,9	357	14,1	11,6	25,5	286	11,3	8,8	19,4	5,8	12,8	4,9	10,8	28,6

1 inch = 25,4 mm | 1m = 3.28 ft | 1 lbs = 0,453 kg

- Tüv certification only valid for loading table above.
- Loading figures are only valid for static loads.
- Loading figures are only valid for single spans with supports at both ends.
- All static systems, other than single spans, need an individual structural calculation. Please contact a structural engineer or Prolyte for assistance.
- Loading figures are calculated according to and in full compliance with European standards (Eurocode).
- The self-weight of the trusses is already taken into account.
- Loading figures are only valid for the cross sectional orientation of the truss as shown by the icon in the loading table.
- The interaction between bending moment and shear force at the connection point is already taken into account.
- Truss spans can be assembled from different truss lengths.
- Read the manual before assembling, using and loading the truss.

Technical Specifications - E20 Series

Types	Triangular (D), Square (V)
Alloy	EN AW 6060 T66
Main Chords	32 x 1,5 mm
Diagonal Members	10 x 1,0 mm
Coupling System	CCS4

Structural data can be found at www.prolyte.com

E20 Series - Standard available Lengths and Codes

Metres	Feet	Code*
0.25/1.00 m in 5 mm steps	0.82'/3.28', in 0.2' steps	
0,25	0.82	E20•-L025
0,50	1.64	E20•-L050
0,58	1.90	E20•-L058
1,00	3.28	E20•-L100
1,50	4.92	E20•-L150
2,00	6.56	E20•-L200
2,50	8.20	E20•-L250
3,00	9.84	E20•-L300
4,00	13.12	E20•-L400

***on • indicate D for Triangular or V for Square truss**

Example: E20V-L200

E20V - Allowable Loading

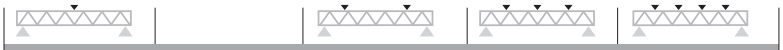

						MAXIMUM ALLOWABLE POINT LOADS										
		Uniformly Distributed Load				Centre Point Load				Single Load Third Points Load per Point		Single Load Fourth Points Load per Point		Single Load Fifth Points Load per Point		
SPAN		UDL		DEFLECTION		CPL		DEFLECTION		TPL		QPL		FPL		SPAN
m	ft	kg/m	lbs/ft	mm	inch	kgs	lbs	mm	inch	kgs	lbs	kgs	lbs	kgs	lbs	total weight
3	9,8	123,2	82,9	8	0,3	265,7	586,3	6	0,2	184,8	407,9	123,2	272,0	92,4	204,0	6,3
4	13,1	91,9	61,9	14	0,5	209,5	462,3	11	0,4	145,7	321,6	115,4	254,6	91,9	202,9	8,4
5	16,4	73,2	49,2	21	0,8	172,3	380,2	17	0,7	120,8	266,6	92,6	204,4	73,5	162,1	10,5
6	19,7	55,1	37,1	31	1,2	145,6	321,4	25	1,0	103,3	227,9	77,4	170,8	61,9	136,6	12,6
7	23,0	40,0	26,9	42	1,6	125,6	277,1	33	1,3	89,8	198,2	66,2	146,0	53,2	117,5	14,7
8	26,2	30,2	20,3	55	2,2	109,8	242,4	44	1,7	79,1	174,7	57,5	126,9	46,5	102,6	16,8
9	29,5	23,4	15,8	69	2,7	97,1	214,3	55	2,2	70,4	155,4	50,5	111,5	41,0	90,6	18,9
10	32,8	18,6	12,5	85	3,4	86,5	191,0	68	2,7	63,2	139,4	44,8	99,0	36,5	80,6	21
11	36,1	15,1	10,1	103	4,1	77,6	171,2	83	3,3	56,9	125,7	40,1	88,4	32,7	72,3	23,1
12	39,4	12,4	8,3	123	4,8	69,9	154,2	98	3,9	51,6	113,8	36,0	79,4	29,5	65,1	25,2
13	42,6	10,2	6,9	144	5,7	63,2	139,4	115	4,5	46,9	103,4	32,4	71,5	26,6	58,8	27,3
14	45,9	8,6	5,8	167	6,6	57,2	126,3	134	5,3	42,7	94,2	29,3	64,6	24,1	53,3	29,4
15	49,2	7,2	4,9	192	7,6	51,9	114,5	154	6,1	38,9	85,9	26,5	58,5	21,9	48,3	31,5
16	52,5	6,1	4,1	219	8,6	47,1	103,9	175	6,9	35,5	78,4	24,0	53,0	19,9	43,9	33,6
17	55,8	5,2	3,5	247	9,7	42,7	94,3	198	7,8	32,4	71,5	21,7	48,0	18,1	39,8	35,7
18	59,0	4,4	3,0	277	10,9	38,7	85,4	221	8,7	29,5	65,1	19,7	43,4	16,4	36,1	37,8
19	62,3	3,8	2,6	308	12,1	35,0	77,2	247	9,7	26,8	59,3	17,7	39,2	14,8	32,7	39,9
20	65,6	3,2	2,2	342	13,4	31,5	69,6	273	10,8	24,3	53,6	16,0	35,3	13,4	29,5	42

1 inch = 25,4 mm | 1m = 3.28 ft | 1 lbs = 0,453 kg

- Tüv certification only valid for loading table above.
- Loading figures are only valid for static loads.
- Loading figures are only valid for single spans with supports at both ends.
- All static systems, other than single spans, need an individual structural calculation. Please contact a structural engineer or Prolyte for assistance.
- Loading figures are calculated according to and in full compliance with European standards (Eurocode).
- The self-weight of the trusses is already taken into account.
- Loading figures are only valid for the cross sectional orientation of the truss as shown by the icon in the loading table.
- The interaction between bending moment and shear force at the connection point is already taken into account.
- Truss spans can be assembled from different truss lengths.
- Read the manual before assembling, using and loading the truss.

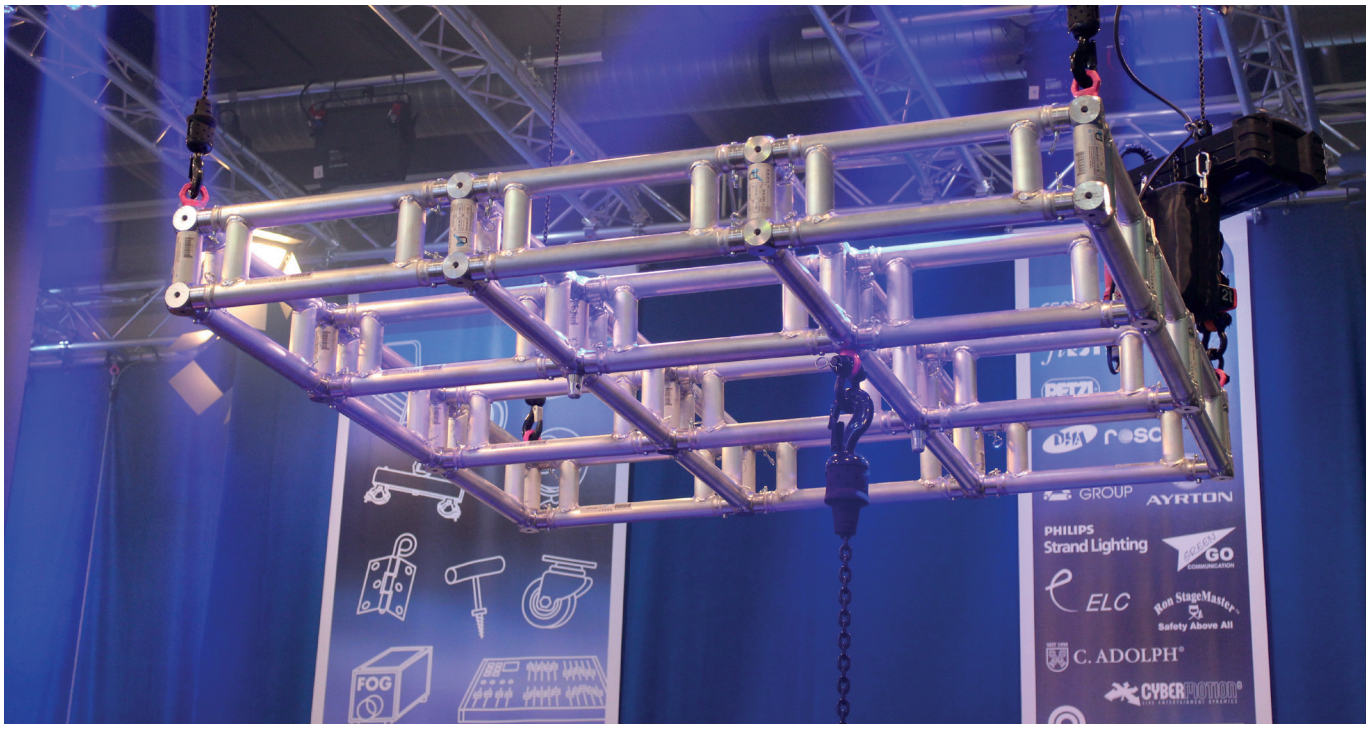

Photo: Cast

MATRIX FRAMES FROM H20LB TRUSS

The H20LB ladder truss is a frame girder - truss without the diagonal members and with rigid joints between top and bottom chords and the verticals. The H20LB is designed to create matrix frames for circumstances where low headroom requires support grids with minimum heights, like studio installations, retail or exhibition applications. Main chords and verticals are designed from 48 mm tubes, the verticals are positioned every 500 mm, to create maximum utility between the verticals. Most standard clamps will fit the 48 mm tube. The standard BoxCorner ribs, with the Prolyte conical coupling system, guarantees fast and easy assembly when compared to traditional bolted structures.

H20LB

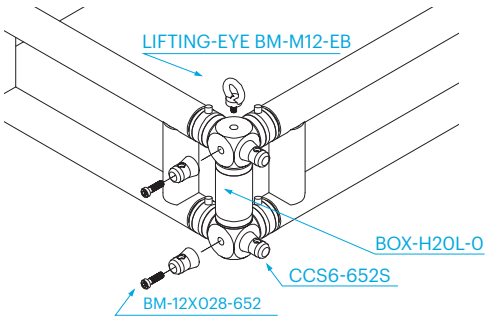

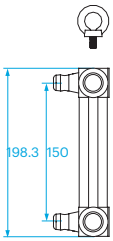

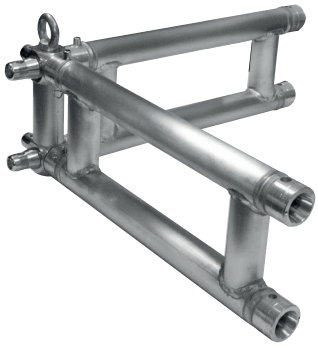

H20LB - Allowable Loading

SPAN		Uniformly Distributed Load UDL		CPL		
m	ft	kg/m	lbs/ft	kgs	lbs	total weight
1,00	3,30	620	417,3	420	282,7	3.3
1,50	4,90	350	235,6	350	235,6	4.6
2,00	6,60	160	107,7	240	161,6	5.9
2,50	8,20	150	101,0	200	134,6	7.2
3,00	9,80	120	80,8	190	127,9	8.5
4,00	13,10	70	47,1	150	101,0	9.8

1 inch = 25,4 mm | 1m = 3.28 ft | 1 lbs = 0,453 kg

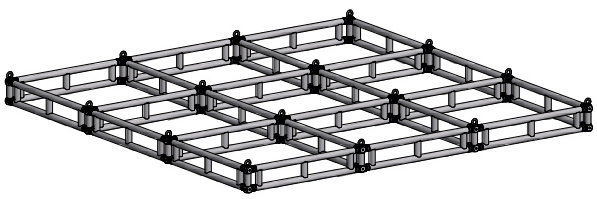

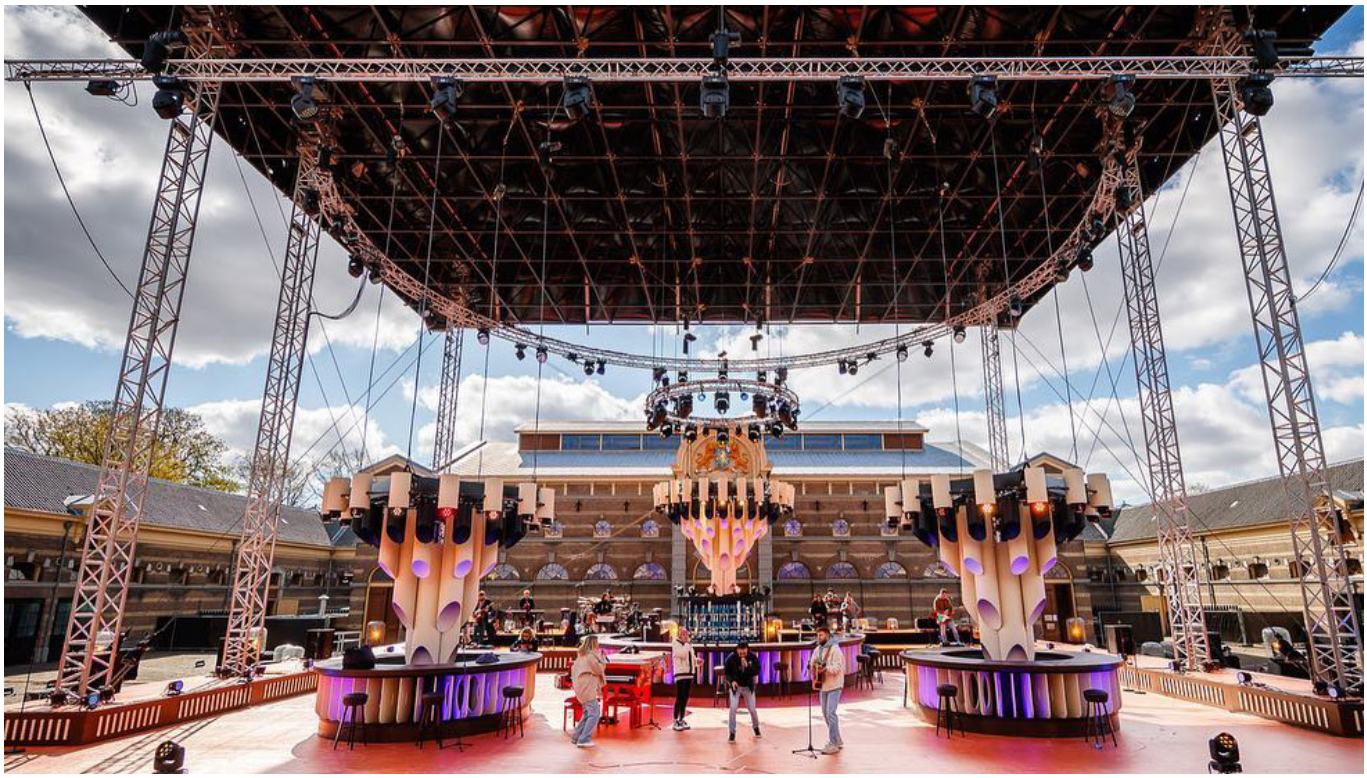

X30 Series truss is constructed of main chords (51 x 2 mm) and diagonals (16 x 2 mm), and uses the CCS6 coupling system. Prolyte supplies a variety of X30 Series truss modules that provide maximum flexibility, including standard or custom-made lengths, circles and arches and several types of corners. Prolyte can create custom-made pieces on request.

X30L

Top View

Side View

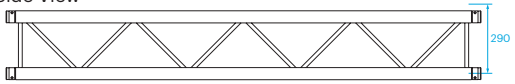

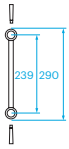

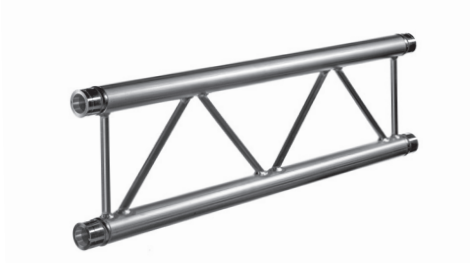

X30D

Top View

Side View

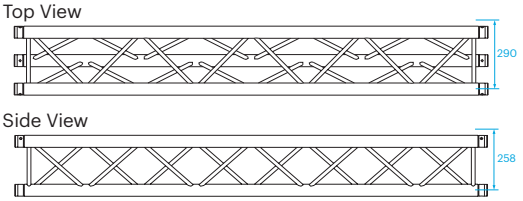

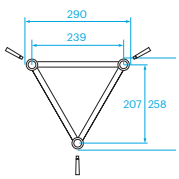

X30V

Top View

Side View

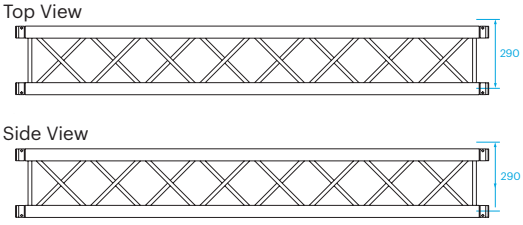

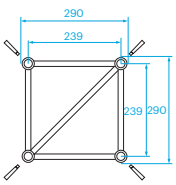

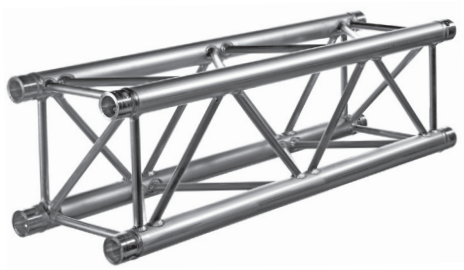

X30D - Allowable Loading

SPAN		Uniformly Distributed Load UDL		DEFLECTION		MAXIMUM ALLOWABLE POINT LOADS Centre Point Load CPL		DEFLECTION		Single Load Third Points Load per Point TPL		Single Load Fourth Points Load per Point QPL		Single Load Fifth Points Load per Point FPL		SPAN
m	ft	kg/m	lbs/ft	mm	inch	kgs	lbs	mm	inch	kgs	lbs	kgs	lbs	kgs	lbs	total weight
3	9,8	443,7	298,6	13	0,5	576,3	1272,0	10	0,4	405,2	894,3	308,9	681,7	245,6	542,1	11,4
4	13,1	248,1	166,9	23	0,9	444,8	981,8	19	0,7	317,5	700,6	234,6	517,7	188,6	416,3	15,2
5	16,4	157,6	106,0	36	1,4	360,8	796,3	29	1,1	260,1	574,1	188,3	415,6	152,5	336,6	19,0
6	19,7	108,4	72,9	52	2,1	302,2	667,0	42	1,7	219,5	484,5	156,6	345,7	127,5	281,4	22,8
7	23,0	78,7	53,0	71	2,8	258,9	571,4	57	2,2	189,2	417,6	133,5	294,6	109,1	240,7	26,6
8	26,2	59,5	40,0	93	3,7	225,4	497,4	75	2,9	165,6	365,4	115,7	255,4	94,9	209,4	30,4
9	29,5	46,3	31,1	118	4,6	198,6	438,2	94	3,7	146,6	323,5	101,6	224,3	83,6	184,4	34,2
10	32,8	36,8	24,8	146	5,7	176,6	389,7	117	4,6	130,9	289,0	90,1	198,9	74,3	163,9	38,0
11	36,1	29,8	20,1	176	6,9	158,1	348,9	141	5,6	117,7	259,9	80,5	177,7	66,5	146,8	41,8
12	39,4	24,5	16,5	210	8,3	142,3	314,0	168	6,6	106,4	234,9	72,3	159,7	59,9	132,1	45,6
13	42,6	20,4	13,7	246	9,7	128,6	283,8	197	7,8	96,6	213,2	65,3	144,1	54,1	119,5	49,4
14	45,9	17,1	11,5	285	11,2	116,5	257,2	228	9,0	87,9	194,1	59,1	130,4	49,1	108,3	53,2
15	49,2	14,5	9,7	328	12,9	105,8	233,6	262	10,3	80,2	177,1	53,6	118,2	44,6	98,4	57,0
16	52,5	12,3	8,3	373	14,7	96,2	212,3	298	11,7	73,3	161,7	48,6	107,4	40,6	89,6	60,8

1 inch = 25,4 mm | 1m = 3.28 ft | 1 lbs = 0,453 kg

- Tüv certification only valid for loading table above.
- Loading figures are only valid for static loads.
- Loading figures are only valid for single spans with supports at both ends.
- All static systems, other than single spans, need an individual structural calculation. Please contact a structural engineer or Prolyte for assistance.
- Loading figures are calculated according to and in full compliance with European standards (Eurocode).
- The self-weight of the trusses is already taken into account.
- Loading figures are only valid for the cross sectional orientation of the truss as shown by the icon in the loading table.
- The interaction between bending moment and shear force at the connection point is already taken into account.
- Truss spans can be assembled from different truss lengths.
- Read the manual before assembling, using and loading the truss.

Technical Specifications - X30 Series

Types	Ladder (L), Triangular (D), Square (V)
Alloy	EN AW 6082 T6
Main Chords	51 x 2 mm
Diagonal Members	16 x 2 mm
Coupling System	CCS6

Structural data can be found at www.prolyte.com

X Coupler - 1 ring

H Coupler - 2 rings

The number of recessed rings in the coupler receiver distinguishes the X and H Series.

X30 Series - Standard available Lengths and Codes

Metres	Feet	Code*
0.25/1.00 m in 5 mm steps	0.82'/3.28', in 0.2' steps	
0,25	0.82	X30•-L025
0,29	0.95	X30•-L029
0,50	1.64	X30•-L050
0,71	2.33	X30•-L071
0,75	2.46	X30•-L075
1,00	3.28	X30•-L100
1,50	4.92	X30•-L150
2,00	6.56	X30•-L200
2,50	8.20	X30•-L250
3,00	9.84	X30•-L300
4,00	13.12	X30•-L400

***on • indicate L for Ladder, D for Triangular or V for Square truss. Example: X30V-L200**

X30V - Allowable Loading

						MAXIMUM ALLOWABLE POINT LOADS										
		Uniformly Distributed Load				Centre Point Load				Single Load Third Points Load per Point		Single Load Fourth Points Load per Point		Single Load Fifth Points Load per Point		
SPAN		UDL		DEFLECTION		CPL		DEFLECTION		TPL		QPL		FPL		SPAN
m	ft	kg/m	lbs/ft	mm	inch	kgs	lbs	mm	inch	kgs	lbs	kgs	lbs	kgs	lbs	total weight
3	9,8	650,0	437,4	10	0,4	1215,0	2681,5	8	0,3	853,5	1883,6	650,0	1434,6	487,5	1076,0	15,3
4	13,1	486,4	327,3	18	0,7	959,5	2117,5	15	0,6	664,0	1465,5	523,6	1155,5	411,2	907,5	20,4
5	16,4	367,1	247,0	28	1,1	791,1	1746,0	23	0,9	555,2	1225,4	424,9	937,7	337,3	744,5	25,5
6	19,7	253,5	170,6	41	1,6	671,5	1482,0	33	1,3	476,1	1050,8	356,6	787,1	285,4	629,8	30,6
7	23,0	185,1	124,5	55	2,2	581,9	1284,3	44	1,7	415,9	918,0	306,5	676,5	246,7	544,4	35,7
8	26,2	140,6	94,6	72	2,9	512,2	1130,4	58	2,3	368,5	813,2	268,1	591,6	216,7	478,3	40,8
9	29,5	110,1	74,1	92	3,6	456,2	1006,8	73	2,9	330,0	728,3	237,5	524,2	192,7	425,4	45,9
10	32,8	88,3	59,4	113	4,5	410,1	905,1	91	3,6	298,1	658,0	212,7	469,3	173,1	382,0	51,0
11	36,1	72,2	48,6	137	5,4	371,4	819,7	110	4,3	271,2	598,6	191,9	423,6	156,6	345,7	56,1
12	39,4	59,9	40,3	163	6,4	338,4	746,9	131	5,1	248,1	547,6	174,4	384,8	142,7	314,8	61,2
13	42,6	50,4	33,9	191	7,5	309,9	683,9	153	6,0	228,1	503,4	159,2	351,4	130,6	288,2	66,3
14	45,9	42,8	28,8	222	8,7	284,9	628,7	178	7,0	210,5	464,5	146,1	322,4	120,0	264,8	71,4
15	49,2	36,7	24,7	255	10,0	262,7	579,8	204	8,0	194,8	429,9	134,4	296,7	110,7	244,2	76,5
16	52,5	31,7	21,3	290	11,4	242,9	536,1	232	9,1	180,8	399,0	124,1	273,9	102,3	225,9	81,6
17	55,8	27,6	18,5	327	12,9	225,1	496,8	262	10,3	168,1	371,0	114,8	253,4	94,8	209,3	86,7
18	59,0	24,1	16,2	367	14,4	208,9	461,1	294	11,6	156,6	345,6	106,4	234,8	88,0	194,3	91,8
19	62,3	21,2	14,2	409	16,1	194,1	428,5	327	12,9	146,0	322,3	98,7	217,9	81,8	180,6	96,9
20	65,6	18,6	12,5	453	17,8	180,5	398,5	363	14,3	136,3	300,8	91,7	202,4	76,1	168,1	102

1 inch = 25,4 mm | 1m = 3.28 ft | 1 lbs = 0,453 kg

- Tüv certification only valid for loading table above.
- Loading figures are only valid for static loads.
- Loading figures are only valid for single spans with supports at both ends.
- All static systems, other than single spans, need an individual structural calculation. Please contact a structural engineer or Prolyte for assistance.
- Loading figures are calculated according to and in full compliance with European standards (Eurocode).
- The self-weight of the trusses is already taken into account.
- Loading figures are only valid for the cross sectional orientation of the truss as shown by the icon in the loading table.
- The interaction between bending moment and shear force at the connection point is already taken into account.
- Truss spans can be assembled from different truss lengths.
- Read the manual before aseembling, using and loading the truss.

X30L - Allowable Loading (Span supported on top chord.)

SPAN		Uniformly Distributed Load UDL		DEFLECTION		CPL		DEFLECTION	
m	ft	kg/m	lbs/ft	mm	inch	kgs	lbs	mm	inch
1	3,3	979,7	659,2	2	0,1	979,7	2162,2	1	0,0
2	6,6	345,0	232,1	1	0,1	345,0	761,4	1	0,0
3	9,8	135,0	90,8	3	0,1	203,0	448,0	2	0,1
4	13,1	64,0	43,1	4	0,2	128,0	282,5	3	0,1
5	16,4	27,0	18,2	4	0,2	67,0	147,9	3	0,1
6	19,7	12,0	8,1	4	0,1	36,0	79,5	3	0,1

1 inch = 25,4 mm | 1m = 3.28 ft | 1 lbs = 0,453 kg

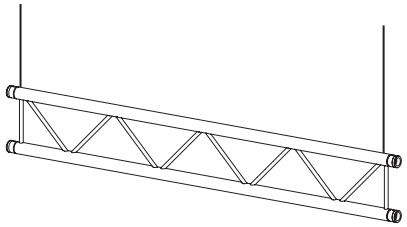

Spans must be supported at each end.
Loads must be suspended from bottom chord only.

X30L - Allowable Loading (Top chord sideways supported each metre.)

SPAN		Uniformly Distributed Load UDL		DEFLECTION		CPL		DEFLECTION	
m	ft	kg/m	lbs/ft	mm	inch	kgs	lbs	mm	inch
4	13,1	243,2	163,7	18	0,7	459,8	1014,8	15	0,6
5	16,4	176,3	118,6	28	1,1	381,7	842,3	23	0,9
6	19,7	123,2	82,9	41	1,6	325,5	718,3	33	1,3
7	23,0	90,6	61,0	55	2,2	283,0	624,7	44	1,7
8	26,2	69,2	46,6	72	2,9	249,8	551,2	58	2,3
9	29,5	54,4	36,6	92	3,6	222,9	492,0	73	2,9
10	32,8	43,7	29,4	113	4,5	200,7	443,0	91	3,6
11	36,1	35,8	24,1	137	5,4	182,1	401,8	110	4,3
12	39,4	29,8	20,0	163	6,4	166,1	366,5	131	5,1

1 inch = 25,4 mm | 1m = 3.28 ft | 1 lbs = 0,453 kg

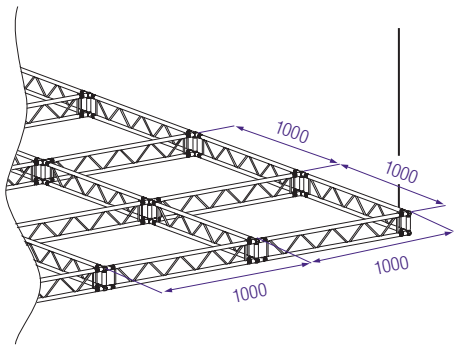

Spans must be supported at each end.
Loads must be suspended from bottom chord only.

X30L - Allowable Loading (Top chords sideways supported every 2 metres.)

SPAN		Uniformly Distributed Load UDL		DEFLECTION		CPL		DEFLECTION	
m	ft	kg/m	lbs/ft	mm	inch	kgs	lbs	mm	inch
4	13,1	84,6	56,9	5	0,2	169,1	373,3	4	0,2
5	16,4	53,3	35,9	8	0,3	133,3	294,1	7	0,3
6	19,7	36,3	24,4	12	0,5	109,0	240,6	10	0,4
7	23,0	26,1	17,6	17	0,7	91,3	201,6	13	0,5
8	26,2	19,5	13,1	22	0,9	77,8	171,7	17	0,7
9	29,5	14,9	10,0	27	1,1	67,0	148,0	22	0,9
10	32,8	11,6	7,8	34	1,3	58,2	128,4	27	1,1
11	36,1	9,2	6,2	41	1,6	50,8	112,0	33	1,3
12	39,4	7,4	5,0	49	1,9	44,4	97,9	39	1,5

1 inch = 25,4 mm | 1m = 3.28 ft | 1 lbs = 0,453 kg

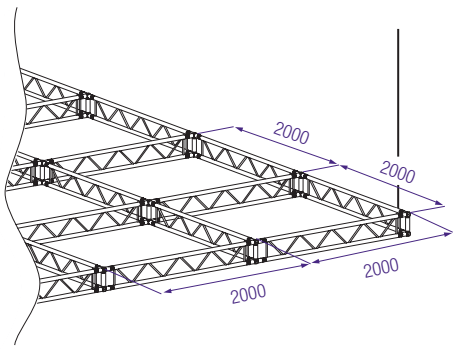

Spans must be supported at each end.
Loads must be suspended from bottom chord only.

Photo: Creativ-Design, Germany

H30 Series truss is constructed of main chords (48 x 3 mm) and diagonals (16 x 2 mm), and uses the CCS6 coupling system. Prolyte supplies a variety of H30 series truss elements that provide maximum flexibility, including standard or custom-made lengths, circles and arches and several types of corners. Prolyte can create custom-made pieces on request.

H30L

Top View

Side View

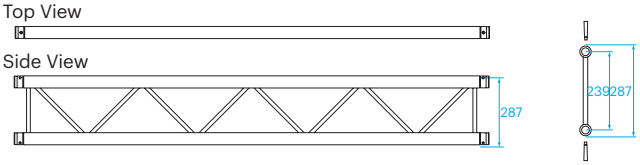

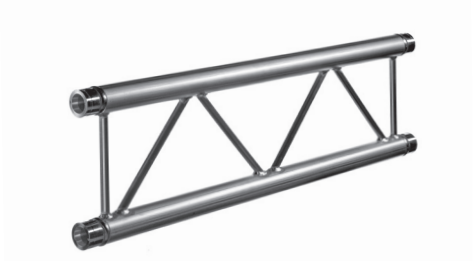

H30D

Top View

Side View

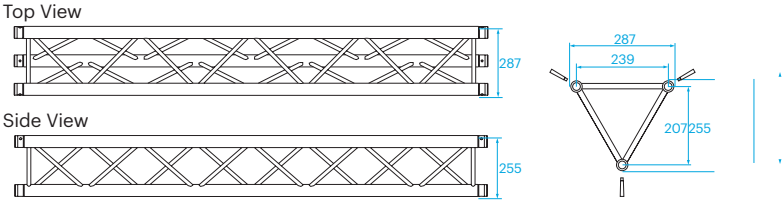

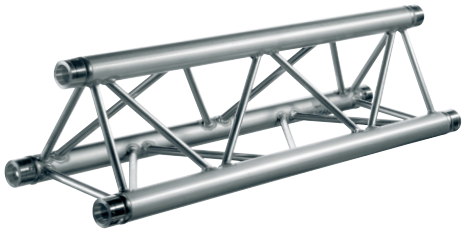

H30V

Top View

Side View

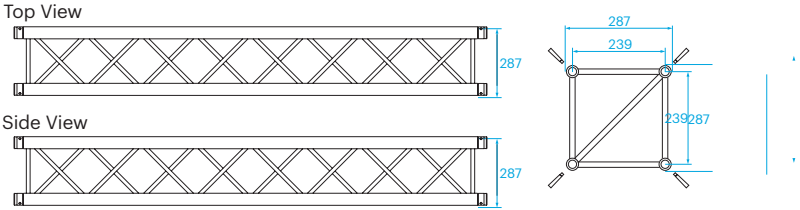

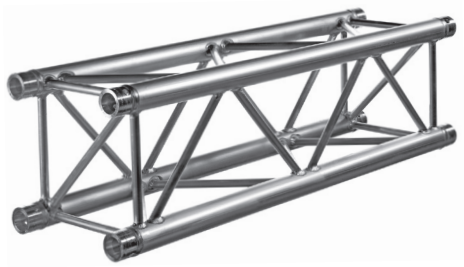

H30D - Allowable Loading

SPAN		Uniformly Distributed Load UDL		DEFLECTION		MAXIMUM ALLOWABLE POINT LOADS Centre Point Load CPL		DEFLECTION		Single Load Third Points Load per Point TPL		Single Load Fourth Points Load per Point QPL		Single Load Fifth Points Load per Point FPL		SPAN
m	ft	kg/m	lbs/ft	mm	inch	kgs	lbs	mm	inch	kgs	lbs	kgs	lbs	kgs	lbs	total weight
3	9,8	562,4	378,4	13	0,5	782,3	1726,6	11	0,4	546,6	1206,4	422,2	931,8	334,1	737,4	15,0
4	13,1	342,0	230,1	23	0,9	606,0	1337,5	19	0,7	430,3	949,7	321,3	709,2	257,4	568,1	20,0
5	16,4	217,3	146,2	37	1,5	492,8	1087,6	29	1,2	353,7	780,6	258,4	570,2	208,6	460,4	25,0
6	19,7	149,5	100,6	53	2,1	413,6	912,8	42	1,7	299,3	660,5	215,2	474,9	174,7	385,5	30,0
7	23,0	108,6	73,1	72	2,8	354,9	783,2	57	2,3	258,4	570,4	183,6	405,1	149,6	330,3	35,0
8	26,2	82,1	55,3	94	3,7	309,4	682,8	75	3,0	226,6	500,0	159,3	351,6	130,3	287,7	40,0
9	29,5	63,9	43,0	118	4,6	273,0	602,4	95	3,7	200,9	443,4	140,1	309,2	114,9	253,6	45,0
10	32,8	50,9	34,3	146	5,7	243,1	536,4	117	4,6	179,7	396,6	124,4	274,5	102,3	225,8	50,0
11	36,1	41,3	27,8	177	7,0	217,9	481,0	142	5,6	161,8	357,2	111,2	245,5	91,7	202,4	55,0
12	39,4	34,0	22,9	211	8,3	196,5	433,6	169	6,6	146,5	323,4	100,1	220,9	82,7	182,5	60,0
13	42,6	28,3	19,0	247	9,7	177,8	392,5	198	7,8	133,2	294,0	90,4	199,6	74,9	165,2	65,0
14	45,9	23,8	16,0	287	11,3	161,4	356,3	229	9,0	121,5	268,1	82,0	180,9	68,0	150,1	70,0
15	49,2	20,1	13,6	329	13,0	146,9	324,1	263	10,4	111,0	245,0	74,5	164,3	61,9	136,6	75,0
16	52,5	17,2	11,5	375	14,8	133,8	295,3	300	11,8	101,6	224,2	67,7	149,5	56,4	124,5	60,8

1 inch = 25,4 mm | 1m = 3.28 ft | 1 lbs = 0,453 kg

- Tüv certification only valid for loading table above.
- Loading figures are only valid for static loads.
- Loading figures are only valid for single spans with supports at both ends.
- All static systems, other than single spans, need an individual structural calculation. Please contact a structural engineer or Prolyte for assistance.
- Loading figures are calculated according to and in full compliance with European standards (Eurocode).
- The self-weight of the trusses is already taken into account.
- Loading figures are only valid for the cross sectional orientation of the truss as shown by the icon in the loading table.
- The interaction between bending moment and shear force at the connection point is already taken into account.
- Truss spans can be assembled from different truss lengths.
- Read the manual before assembling, using and loading the truss.

Technical Specifications - H30 Series

Types	Ladder (L), Triangular (D), Square (V)
Alloy	EN AW 6082 T6
Main Chords	48 x 3 mm
Diagonal Members	16 x 2 mm
Coupling System	CCS6

Structural data can be found at www.prolyte.com

X Coupler - 1 ring

H Coupler - 2 rings

The number of recessed rings in the conical receiver distinguishes the X and H Series.

H30 Series - Standard available Lengths and Codes

Metres	Feet	Code*
0.25/1.00 m in 5 mm steps	0.82'/3.28', in 0.2' steps	
0,25	0.82	H30•-L025
0,29	0.95	H30•-L029
0,50	1.64	H30•-L050
0,71	2.33	H30•-L071
1,00	3.28	H30•-L100
1,50	4.92	H30•-L150
2,00	6.56	H30•-L200
2,50	8.20	H30•-L250
3,00	9.84	H30•-L300
4,00	13.12	H30•-L400

***on • indicate L for Ladder, D for Triangular or V for Square truss. Example: H30V-L200**

H30V - Allowable Loading

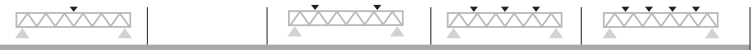

						MAXIMUM ALLOWABLE POINT LOADS										
		Uniformly Distributed Load				Centre Point Load				Single Load Third Points Load per Point		Single Load Fourth Points Load per Point		Single Load Fifth Points Load per Point		
SPAN		UDL		DEFLECTION		CPL		DEFLECTION		TPL		QPL		FPL		SPAN
m	ft	kg/m	lbs/ft	mm	inch	kgs	lbs	mm	inch	kgs	lbs	kgs	lbs	kgs	lbs	total weight
3	9,8	649,0	436,7	10	0,4	1667,9	3681,0	8	0,3	973,4	2148,4	649,0	1432,2	486,7	1074,2	18,9
4	13,1	485,3	326,5	18	0,7	1298,1	2864,9	15	0,6	932,1	2057,2	647,1	1428,1	485,3	1071,1	25,2
5	16,4	387,1	260,5	28	1,1	1074,2	2370,9	23	0,9	749,1	1653,3	581,1	1282,5	469,0	1035,1	31,5
6	19,7	321,6	216,4	41	1,6	914,4	2018,2	33	1,3	644,7	1422,8	488,7	1078,6	389,3	859,3	37,8
7	23,0	255,6	172,0	56	2,2	794,4	1753,2	45	1,8	564,8	1246,5	420,7	928,6	337,3	744,4	44,1
8	26,2	194,4	130,8	73	2,9	700,6	1546,3	58	2,3	501,6	1107,0	368,5	813,3	296,9	655,2	50,4
9	29,5	152,4	102,5	92	3,6	625,2	1379,9	74	2,9	450,2	993,7	327,0	721,8	264,5	583,8	56,7
10	32,8	122,3	82,3	114	4,5	563,2	1242,9	91	3,6	407,6	899,5	293,2	647,1	238,0	525,2	63,0
11	36,1	100,1	67,4	137	5,4	511,0	1127,8	110	4,3	371,5	820,0	265,1	585,0	215,7	476,1	69,3
12	39,4	83,2	56,0	164	6,5	466,5	1029,6	131	5,2	340,6	751,7	241,2	532,3	196,8	434,3	75,6
13	42,6	70,1	47,2	192	7,6	428,0	944,6	154	6,1	313,7	692,4	220,7	487,0	180,5	398,3	81,9
14	45,9	59,6	40,1	223	8,8	394,3	870,2	178	7,0	290,1	640,2	202,8	447,5	166,2	366,8	88,2
15	49,2	51,2	34,5	256	10,1	364,5	804,3	205	8,1	269,1	593,8	187,0	412,8	153,6	338,9	94,5
16	52,5	44,3	29,8	291	11,5	337,8	745,5	233	9,2	250,3	552,3	173,0	381,9	142,3	314,1	100,8
17	55,8	38,6	26,0	328	12,9	313,8	692,5	263	10,4	233,3	514,9	160,4	354,1	132,2	291,8	107,1
18	59,0	33,8	22,8	368	14,5	292,0	644,5	295	11,6	217,9	480,8	149,1	329,0	123,1	271,6	113,4
19	62,3	29,8	20,0	410	16,1	272,2	600,7	328	12,9	203,7	449,6	138,7	306,2	114,7	253,2	119,7
20	65,6	26,3	17,7	454	17,9	253,9	560,4	364	14,3	190,7	420,9	129,3	285,3	107,1	236,3	126

1 inch = 25,4 mm | 1m = 3.28 ft | 1 lbs = 0,453 kg

- Tüv certification only valid for loading table above.
- Loading figures are only valid for static loads.
- Loading figures are only valid for single spans with supports at both ends.
- All static systems, other than single spans, need an individual structural calculation. Please contact a structural engineer or Prolyte for assistance.
- Loading figures are calculated according to and in full compliance with European standards (Eurocode).
- The self-weight of the trusses is already taken into account.
- Loading figures are only valid for the cross sectional orientation of the truss as shown by the icon in the loading table.
- The interaction between bending moment and shear force at the connection point is already taken into account.
- Truss spans can be assembled from different truss lengths.
- Read the manual before assembling, using and loading the truss.

H30L - Allowable Loading (Span supported on top chord.)

SPAN		Uniformly Distributed Load UDL		DEFLECTION		CPL		DEFLECTION	
m	ft	kg/m	lbs/ft	mm	inch	kgs	lbs	mm	inch
1	3,3	979,2	658,9	1	0,0	979,2	2161,2	1	0,0
2	6,6	389,0	261,7	1	0,0	389,0	858,5	1	0,0
3	9,8	156,0	105,0	2	0,1	234,0	516,4	2	0,1
4	13,1	73,0	49,1	3	0,1	146,0	322,2	3	0,1
5	16,4	36,0	24,2	4	0,2	90,0	198,6	3	0,1
6	19,7	15,0	10,1	3	0,1	45,0	99,3	3	0,1

1 inch = 25,4 mm | 1m = 3.28 ft | 1 lbs = 0,453 kg

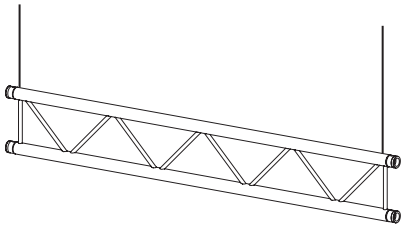

Spans must be supported at each end.
Loads must be suspended from bottom chord only.

H30L - Allowable Loading (Top chord sideways supported each meter.)

SPAN		Uniformly Distributed Load UDL		DEFLECTION		CPL		DEFLECTION	
m	ft	kg/m	lbs/ft	mm	inch	kgs	lbs	mm	inch
4	13,1	242,8	163,4	18	0,7	619,9	1368,1	15	0,6
5	16,4	193,7	130,3	28	1,1	516,7	1140,5	23	0,9
6	19,7	161,0	108,3	41	1,6	442,2	975,9	33	1,3
7	23,0	124,6	83,9	56	2,2	385,6	851,0	45	1,8
8	26,2	95,4	64,2	73	2,9	341,1	752,9	58	2,3
9	29,5	75,1	50,5	92	3,6	305,2	673,6	74	2,9
10	32,8	60,5	40,7	114	4,5	275,5	608,0	91	3,6
11	36,1	49,6	33,4	137	5,4	250,4	552,7	110	4,3
12	39,4	41,4	27,8	164	6,4	229,0	505,3	131	5,2

1 inch = 25,4 mm | 1m = 3.28 ft | 1 lbs = 0,453 kg

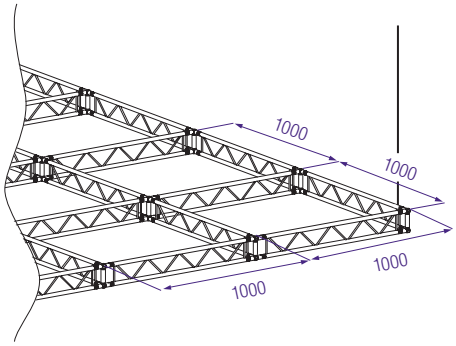

Spans must be supported at each end.
Loads must be suspended from bottom chord only.

H30L - Allowable Loading (Top chords sideways supported every 2 meters.)

SPAN		Uniformly Distributed Load UDL		DEFLECTION		CPL		DEFLECTION	
m	ft	kg/m	lbs/ft	mm	inch	kgs	lbs	mm	inch
4	13,1	95,2	64,1	4	0,2	190,5	420,3	4	0,1
5	16,4	60,0	40,4	7	0,3	149,9	330,9	6	0,2
6	19,7	40,8	27,5	10	0,4	122,5	270,3	8	0,3
7	23,0	29,3	19,7	14	0,5	102,5	226,1	11	0,4
8	26,2	21,8	14,7	18	0,7	87,1	192,3	14	0,6
9	29,5	16,6	11,2	23	0,9	74,9	165,3	18	0,7
10	32,8	13,0	8,7	28	1,1	64,8	143,1	22	0,9
11	36,1	10,2	6,9	34	1,3	56,4	124,4	27	1,1
12	39,4	8,2	5,5	40	1,6	49,1	108,3	32	1,3

1 inch = 25,4 mm | 1m = 3.28 ft | 1 lbs = 0,453 kg

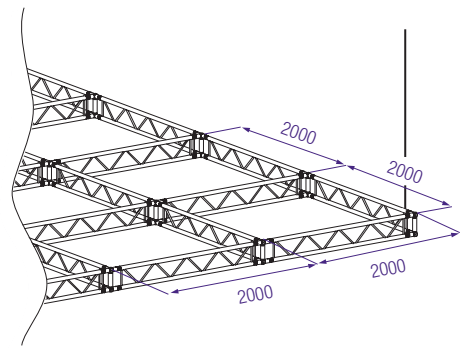

Spans must be supported at each end.
Loads must be suspended from bottom chord only.

Photo: © Prolyte, Introduction of the Verto Truss at Prolight + Sound, Frankfurt, Germany

ROTATING COUPLING SYSTEM

The Verto* truss is based on a new principle of truss connection, where the sections are joined by a rotating coupler system. This system has great advantages over existing systems. The name Verto is derived from Latin, meaning to turn or to turn around and that is exactly how this coupler works. A simple flick of your wrist will connect the truss modules.
The Verto truss is designed as an additional system, for those circumstances where its specific characteristics come into play, like the silent connection and reduced assembly time. Its structure resembles that of the standard H30V truss.

COUPLING SYSTEM: VER6-600

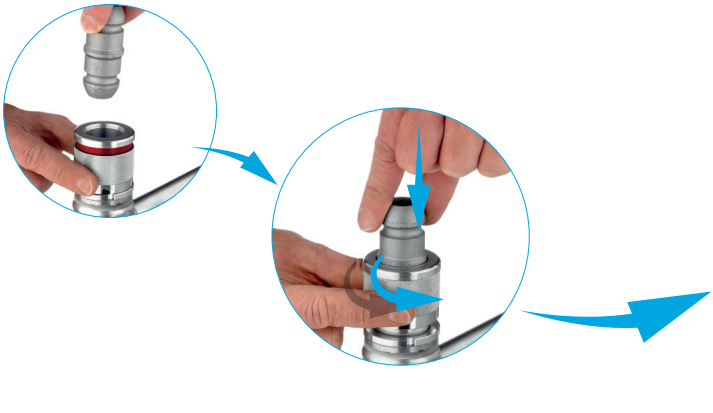

VER-H30V

Top View

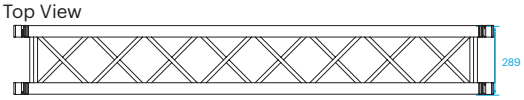

Side View

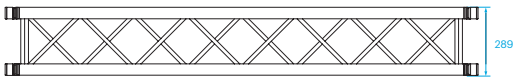

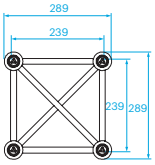

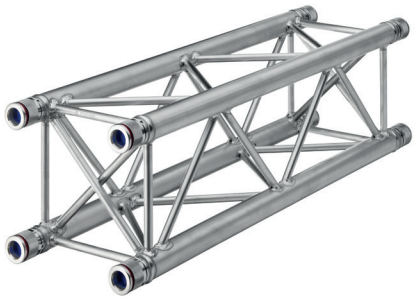

BRINGING BENEFITS TO THE WORK FLOOR

This truss can greatly benefit the daily working practice for technicians, its tool-less connection is almost completely silent, thereby greatly adding to safety on the work floor. Tested general sound levels are around 55dB, where a conical truss system generates a sound level of 80dB during assembly. Furthermore, it reduces the assembly and disassembly time. Tested general assembly times are up to 5 times faster than those for truss with conical coupling systems and 10 times faster than any bolted truss.

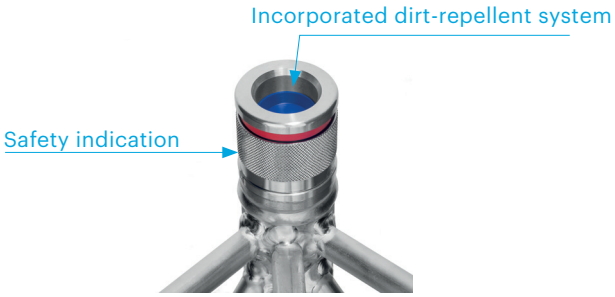

VERTO SYSTEM BENEFITS

- Tool-less system, no tools needed for assembly and disassembly.
- Safety indication: when the red ring is still visible, the connection is not (fully) closed.
- No protruding parts, ideal for attaching banners or drapes.
- Bringing safety to the work floor – its silent connection adds greatly to work floor communication.
- Incredible fast connection and disconnection, reducing production time.
- Strong and compact, based on the H30V truss with similar loading capacity.
- Coupling parts can be replaced, prolonging the general lifetime of your truss.
- Versatile system with many application possibilities, the additional box corner completes the system.

BOX-30V-HD-0

Box corner for Verto truss.

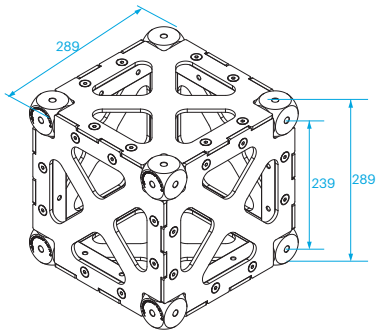

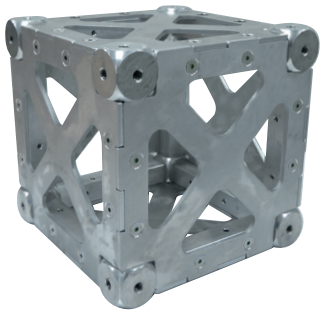

VER6-600

Conical coupler 600 series for Verto truss

VER6-652S

Coupler half male
To be used with bolt VER-M12x030-652S

VER6-605

A plastic clip is available as a secondary safety measure. It can be simply clipped into place when a visual identifier is required.

VER-BOX-30V-A-001

Boxcorner attachment
To be used with BM-M12x035-IB, DIN 912 hexagon bolt

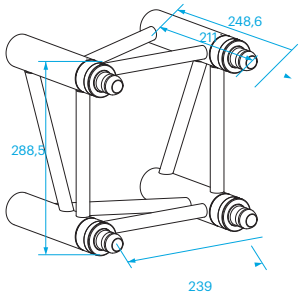

VER6-649

Coupler half male for base plate

VER-H30V - Allowable Loading

						MAXIMUM ALLOWABLE POINT LOADS										
		Uniformly Distributed Load				Centre Point Load				Single Load Third Points Load per Point		Single Load Fourth Points Load per Point		Single Load Fifth Points Load per Point		
SPAN		UDL		DEFLECTION		CPL		DEFLECTION		TPL		QPL		FPL		SPAN
m	ft	kg/m	lbs/ft	mm	inch	kgs	lbs	mm	inch	kgs	lbs	kgs	lbs	kgs	lbs	total weight
3	9,8	647,4	435,6	10	0,4	1557,0	3436,4	8	0,3	971,1	2143,3	647,4	1428,9	485,6	1071,6	21,4
4	13,1	483,8	325,5	18	0,7	1228,7	2711,7	15	0,6	862,4	1903,3	645,0	1423,6	483,8	1067,7	28,4
5	16,4	385,6	259,4	28	1,1	1025,0	2262,2	23	0,9	702,7	1550,8	565,7	1248,4	449,8	992,7	35,5
6	19,7	320,1	215,4	41	1,6	877,2	1935,9	33	1,3	609,1	1344,2	476,9	1052,6	375,4	828,5	42,6
7	23,0	254,1	170,9	56	2,2	764,6	1687,4	45	1,8	536,3	1183,6	411,1	907,3	326,1	719,7	49,7
8	26,2	192,8	129,7	73	2,9	675,8	1491,4	58	2,3	477,9	1054,8	360,2	794,9	287,4	634,4	56,8
9	29,5	150,8	101,5	92	3,6	603,7	1332,3	74	2,9	430,0	949,0	319,5	705,2	256,3	565,6	63,9
10	32,8	120,8	81,3	114	4,5	543,9	1200,3	91	3,6	389,8	860,2	286,2	631,6	230,5	508,7	71
11	36,1	98,6	66,3	137	5,4	493,3	1088,6	110	4,3	355,5	784,6	258,3	570,1	208,8	460,8	78,1
12	39,4	81,7	55,0	164	6,5	449,8	992,7	131	5,2	325,8	719,1	234,6	517,7	190,2	419,8	85,2
13	42,6	68,5	46,1	192	7,6	411,9	909,1	154	6,1	299,8	661,7	214,0	472,4	174,1	384,2	92,3
14	45,9	58,1	39,1	223	8,8	378,6	835,5	178	7,0	276,8	611,0	196,1	432,8	159,9	352,9	99,4
15	49,2	49,7	33,4	256	10,1	348,9	770,0	205	8,1	256,3	565,6	180,2	397,7	147,3	325,1	106,5
16	52,5	42,8	28,8	291	11,5	322,2	711,1	233	9,2	237,7	524,6	166,0	366,4	136,0	300,2	113,6
17	55,8	37,1	25,0	328	12,9	298,1	657,9	263	10,4	220,9	487,4	153,2	338,2	125,8	277,7	120,7
18	59,0	32,3	21,7	368	14,5	276,1	609,3	295	11,6	205,4	453,4	141,6	312,6	116,5	257,2	127,8
19	62,3	28,3	19,0	410	16,1	255,9	564,8	328	12,9	191,2	422,1	131,0	289,2	108,0	238,4	134,9
20	65,6	24,8	16,7	454	17,9	237,3	523,6	364	14,3	178,1	393,0	121,3	267,6	100,2	221,1	142

1 inch = 25,4 mm | 1m = 3.28 ft | 1 lbs = 0,453 kg

- Tüv certification only valid for loading table above.
- Loading figures are only valid for static loads.
- Loading figures are only valid for single spans with supports at both ends.
- All static systems, other than single spans, need an individual structural calculation. Please contact a structural engineer or Prolyte for assistance.
- Loading figures are calculated according to and in full compliance with European standards (Eurocode).
- The self-weight of the trusses is already taken into account.
- Loading figures are only valid for the cross sectional orientation of the truss as shown by the icon in the loading table.
- The interaction between bending moment and shear force at the connection point is already taken into account.
- Truss spans can be assembled from different truss lengths.
- Read the manual before assembling, using and loading the truss.

Technical Specifications - Verto

Type	VER-H30V
Alloy	EN AW 6082 T6
Main Chords	48 x 3 mm
Diagonal Members	16 x 2 mm
Coupling System	Verto, CrMo4

VER-H30V - Standard available Lengths and Codes

Metres	Feet	Code
0,25	0.82	VER-H30V-L025
0,29	0.95	VER-H30V-L029
0,50	1.64	VER-H30V-L050
0,71	2.33	VER-H30V-L071
1,00	3.28	VER-H30V-L100
1,50	4.57	VER-H30V-L150
2,00	6.56	VER-H30V-L200
2,50	8.20	VER-H30V-L250
3,00	9.84	VER-H30V-L300
4,00	13.12	VER-H30V-L400

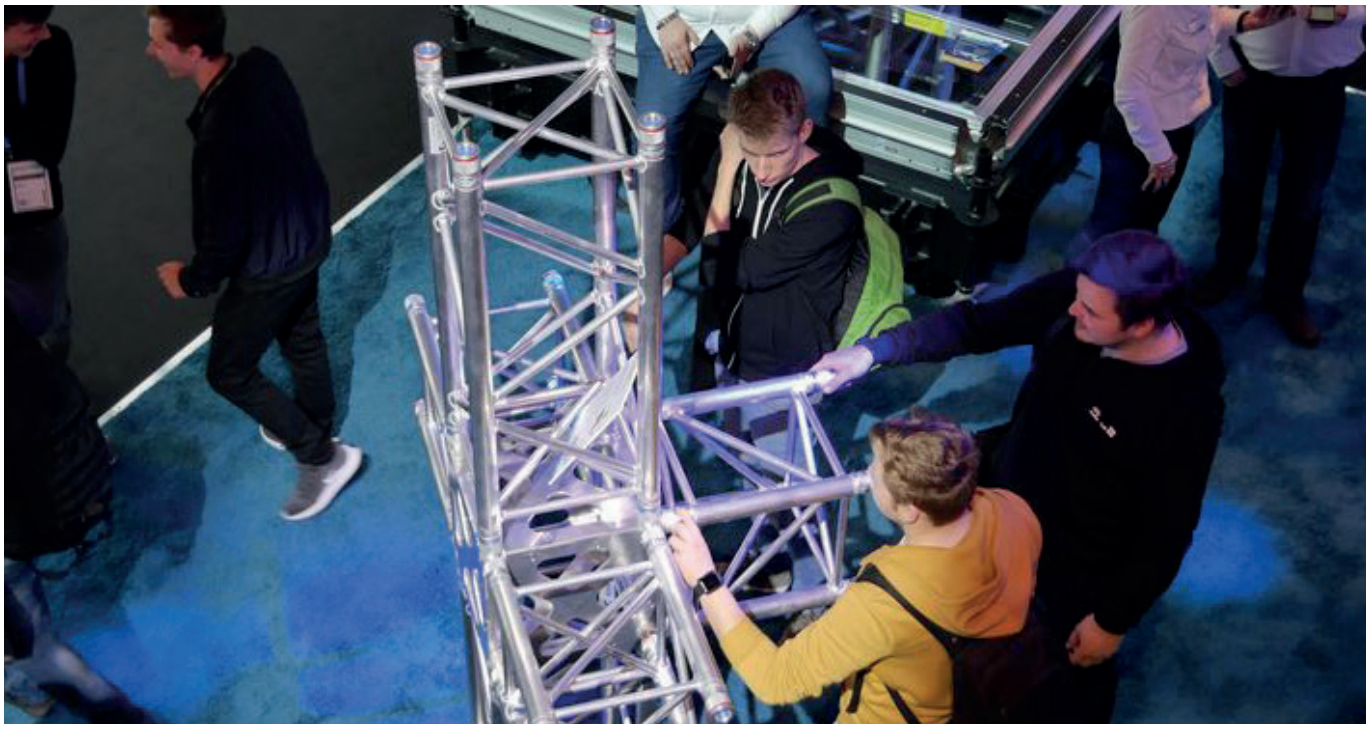

Photo: Prolyte at Prolight + Sound, Frankfurt, Germany

The Verto-H40V offers extra strength compared to the Verto-H30V, next to its flexible application possibilities and is the ideal solution for the event or exhibition market.
The Verto-H40R has a clever program of specifications; compact and strong, and three-sided webbing. The thicker braces on the bottom side allow easy mounting of moving heads and central loading, reducing the torsion effect resulting from one-sided loading in standard trusses.

VER-H40R

Top view

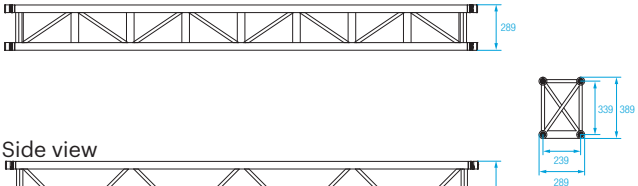

Side view

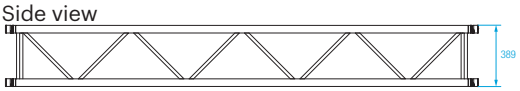

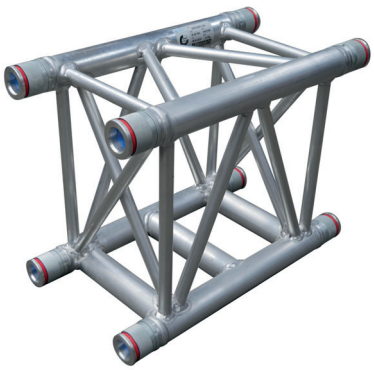

VER-H40V

Top view

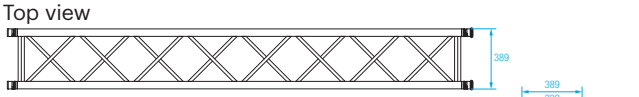

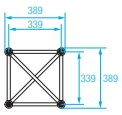

Side view

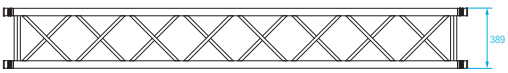

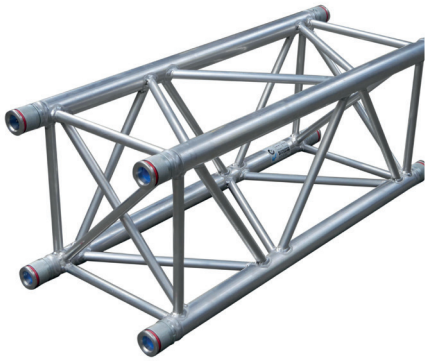

VER-H40V - Allowable Loading

SPAN		Uniformly Distributed Load UDL		DEFLECTION		MAXIMUM ALLOWABLE POINT LOADS Centre Point Load CPL		DEFLECTION		Single Load Third Points Load per Point TPL		Single Load Fourth Points Load per Point QPL		Single Load Fifth Points Load per Point FPL		SPAN
m	ft	kg/m	lbs/ft	mm	inch	kgs	lbs	mm	inch	kgs	lbs	kgs	lbs	kgs	lbs	total weight
3	9,8	834,5	561,5	7	0,3	2011,3	4438,9	6	0,2	1251,7	2762,5	834,5	1841,7	625,8	1381,2	24
4	13,1	624,0	419,9	13	0,5	1595,7	3521,8	10	0,4	1100,7	2429,2	832,1	1836,4	624,0	1377,3	32
5	16,4	497,8	334,9	20	0,8	1352,2	2984,4	16	0,6	915,7	2021,0	768,2	1695,3	612,0	1350,7	40
6	19,7	413,6	278,3	29	1,1	1171,3	2585,1	23	0,9	793,0	1750,2	656,1	1448,0	506,0	1116,8	48
7	23,0	353,5	237,9	40	1,6	1031,4	2276,3	32	1,2	706,6	1559,4	569,5	1256,9	443,4	978,6	56
8	26,2	276,5	186,1	52	2,0	919,6	2029,6	41	1,6	636,2	1404,1	502,1	1108,2	394,0	869,5	64
9	29,5	217,0	146,0	65	2,6	828,2	1827,8	52	2,1	577,6	1274,8	448,1	988,9	353,8	780,9	72
10	32,8	174,4	117,3	81	3,2	751,8	1659,1	65	2,5	528,0	1165,4	403,7	890,9	320,4	707,2	80
11	36,1	142,9	96,1	98	3,8	686,8	1515,9	78	3,1	485,5	1071,4	366,5	808,8	292,2	644,9	88
12	39,4	118,9	80,0	116	4,6	630,9	1392,4	93	3,7	448,4	989,7	334,8	738,9	268,0	591,4	96
13	42,6	100,2	67,4	137	5,4	582,1	1284,4	109	4,3	415,8	917,7	307,4	678,5	246,9	545,0	104
14	45,9	85,4	57,5	158	6,2	539,0	1189,6	127	5,0	386,9	853,9	283,5	625,7	228,4	504,1	112
15	49,2	73,5	49,5	182	7,2	500,7	1105,0	146	5,7	361,0	796,7	262,4	579,1	212,0	467,9	120
16	52,5	63,7	42,9	207	8,1	466,3	1029,0	166	6,5	337,6	745,1	243,5	537,5	197,3	435,4	128
17	55,8	55,6	37,4	234	9,2	435,1	960,4	187	7,4	316,4	698,2	226,6	500,1	184,0	406,1	136
18	59,0	48,8	32,9	262	10,3	406,8	897,8	210	8,3	296,9	655,4	211,3	466,3	171,9	379,5	144
19	62,3	43,1	29,0	292	11,5	380,9	840,6	233	9,2	279,1	615,9	197,3	435,5	160,9	355,2	152
20	65,6	38,2	25,7	323	12,7	357,0	787,8	259	10,2	262,6	579,5	184,5	407,2	150,8	332,8	160

1 inch = 25,4 mm | 1m = 3.28 ft | 1 lbs = 0,453 kg

Without deflection limit

- Tüv certification only valid for loading table above.
- Loading figures are only valid for static loads.
- Loading figures are only valid for single spans with supports at both ends.
- All static systems, other than single spans, need an individual structural calculation. Please contact a structural engineer or Prolyte for assistance.
- Loading figures are calculated according to and in full compliance with European standards (Eurocode).
- The self-weight of the trusses is already taken into account.
- Loading figures are only valid for the cross sectional orientation of the truss as shown by the icon in the loading table.
- The interaction between bending moment and shear force at the connection point is already taken into account.
- Truss spans can be assembled from different truss lengths.
- Read the manual before assembling, using and loading the truss.

Technical Specifications – Verto H40V

Type	VER-H40V
Alloy	EN AW 6082 T6
Main Chords	48 x 3 mm
Braces	20 x 2 mm
Coupling System	Verto, CrMo4

Standard available lengths and codes H40V series

Metres	Feet	Code
0,50	1,64	VER-H40V-L050
1,00	3,28	VER-H40V-L100
1,50	4,57	VER-H40V-L150
2,00	6,56	VER-H40V-L200
2,50	8,20	VER-H40V-L250
3,00	9,84	VER-H40V-L300
4,00	13,12	VER-H40R-L400

VER-H40R - Allowable Loading

SPAN		Uniformly Distributed Load		DEFLECTION		MAXIMUM ALLOWABLE POINT LOADS Centre Point Load		DEFLECTION		Single Load Third Points Load per Point		Single Load Fourth Points Load per Point		Single Load Fifth Points Load per Point		SPAN
		UDL				CPL				TPL		QPL		FPL		
m	ft	kg/m	lbs/ft	mm	inch	kgs	lbs	mm	inch	kgs	lbs	kgs	lbs	kgs	lbs	total weight
3	9,8	834,5	561,5	7	0,3	2011,3	4438,9	6	0,2	1251,7	2765,5	834,5	1841,7	625,8	1381,2	24
4	13,1	624,0	419,9	13	0,5	1595,7	3521,8	10	0,4	1100,7	2429,2	832,1	1836,4	624,0	1377,3	32
5	16,4	497,8	334,9	20	0,8	1352,2	2984,4	16	0,6	915,7	2021,0	768,2	1695,3	612,0	1350,7	40
6	19,7	413,6	278,3	29	1,1	1171,3	2585,1	23	0,9	793,0	1750,2	656,1	1448,0	506,0	1116,8	48
7	23,0	353,5	237,9	40	1,6	1031,4	2276,3	32	1,2	706,6	1559,4	569,5	1256,9	443,4	978,6	56
8	26,2	276,5	186,1	52	2,0	919,6	2029,6	41	1,6	636,2	1404,1	502,1	1108,2	394,0	869,5	64
9	29,5	217,0	146,0	65	2,6	828,2	1827,8	52	2,1	577,6	1274,8	448,1	988,9	353,8	780,9	72
10	32,8	174,4	117,3	81	3,2	751,8	1659,1	65	2,5	528,0	1165,4	403,7	890,9	320,4	707,2	80
11	36,1	142,9	96,1	98	3,8	686,8	1515,9	78	3,1	485,5	1071,4	366,5	808,8	292,2	644,9	88
12	39,4	118,9	80,0	116	4,6	630,9	1392,4	93	3,7	448,4	989,7	334,8	738,9	268,0	591,4	96
13	42,6	100,2	67,4	137	5,4	582,1	1284,6	109	4,3	415,8	917,7	307,4	678,5	246,9	545,0	104
14	45,9	85,4	57,5	158	6,2	539,0	1189,6	127	5,0	386,9	853,9	283,5	625,7	228,4	504,1	112
15	49,2	73,5	49,5	182	7,2	500,7	1105,0	146	5,7	361,0	796,7	2562,4	579,1	212,0	467,9	120
16	52,5	63,7	42,9	207	8,1	466,3	1029,0	166	6,5	337,6	745,1	243,5	537,5	197,3	435,4	128
17	55,8	55,6	37,4	234	9,2	435,1	960,4	187	7,4	316,4	698,2	226,6	500,1	184,0	406,1	136
18	59,0	48,8	32,9	262	10,3	406,8	897,8	210	8,3	296,9	655,4	211,3	466,3	171,9	379,5	144
19	62,3	43,1	29,0	292	11,3	380,9	840,6	233	9,2	279,1	615,9	197,3	435,5	160,9	355,2	152
20	65,6	38,2	25,7	323	12,7	357,0	787,8	259	10,2	262,6	579,5	184,5	407,2	150,8	332,8	160

1 inch = 25,4 mm | 1m = 3.28 ft | 1 lbs = 0,453 kg

Without deflection limit

- Tüv certification only valid for loading table above.
- Loading figures are only valid for static loads.
- Loading figures are only valid for single spans with supports at both ends.
- All static systems, other than single spans, need an individual structural calculation. Please contact a structural engineer or Prolyte for assistance.
- Loading figures are calculated according to and in full compliance with European standards (Eurocode).
- The self-weight of the trusses is already taken into account.
- Loading figures are only valid for the cross sectional orientation of the truss as shown by the icon in the loading table.
- The interaction between bending moment and shear force at the connection point is already taken into account.
- Truss spans can be assembled from different truss lengths.
- Read the manual before assembling, using and loading the truss.

Technical Specifications – Verto H40R

Type	VER-H40R
Alloy	EN AW 6082 T6
Main Chords	48 x 3 mm
Braces	20 x 2 mm
Coupling System	Verto, CrMo4

Standard available lengths and codes H40R codes

Metres	Feet	Code
0,50	1,64	VER-H40R-L050
1,00	3,28	VER-H40R-L100
1,50	4,57	VER-H40R-L150
2,00	6,56	VER-H40R-L200
2,50	8,20	VER-H40R-L250
3,00	9,84	VER-H40R-L300
4,00	13,12	VER-H40R-L400

Photo: DWR Distribution CC, South Africa. Project: JHB International Motor Show

H40 Series truss is constructed of main chords (48 x 3 mm) and diagonals (20 x 2 mm), and uses the CCS6 coupling system. Prolyte supplies a variety of H40 Series truss elements that provide maximum flexibility, including standard or custom-made lengths, circles and arches and several types of corners. Prolyte can create custom-made pieces on request.

H40L

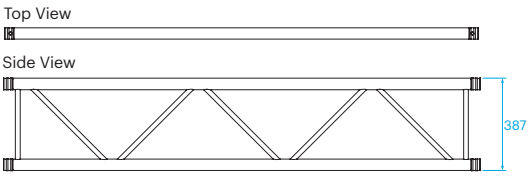

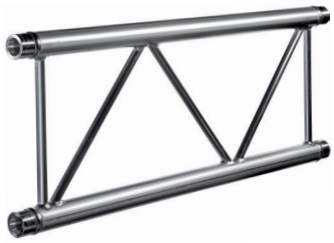

H40D

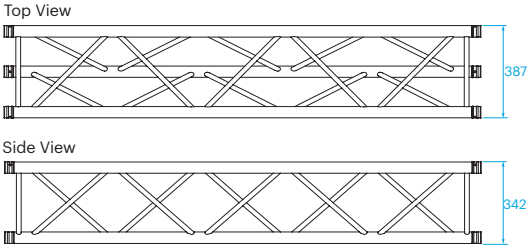

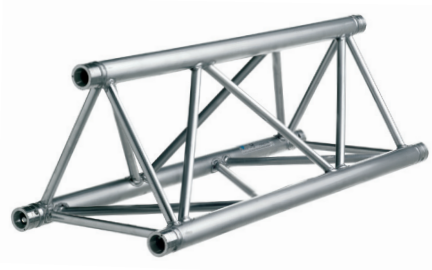

H40V

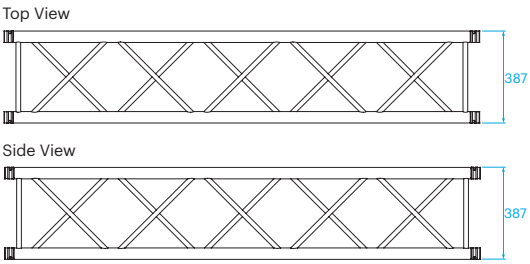

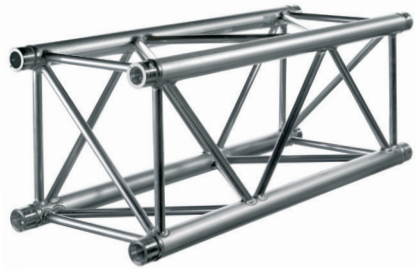

Photo: IPS, AV Network London Event , H40R truss

H40R

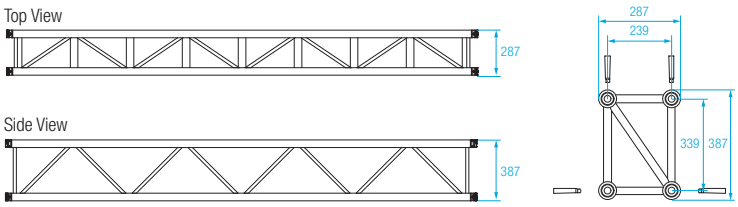

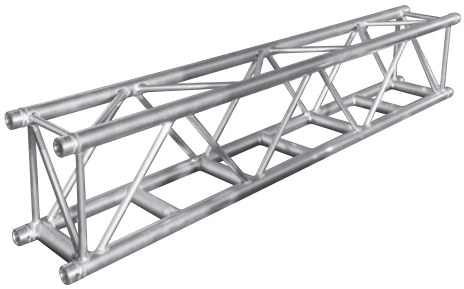

Technical Specifications - H40L, H40D, H40V, H40R

Types	Ladder (L), Triangular (D), Square (V), Rectangular (R)
Alloy	EN AW 6082 T6
Main Chords	48 x 3 mm
Diagonal Members	20 x 2 mm
Coupling System	CCS6

Structural data can be found at www.prolyte.com

H40L, H40D, H40V, H40R- Standard available Lengths and Codes

Metres 0.25/1.00 m in 5 mm steps	Feet 0.82'/3.28', in 0.2' steps	Code*
0,25	0.82	H40•-L025
0,50	1.90	H40•-L050
0,75	2.46	H40•-L075
0,81	2.65	H40•-L081
1,00	3.28	H40•-L100
1,50	4.92	H40•-L150
2,00	6.56	H40•-L200
2,50	8.20	H40•-L250
3,00	9.84	H40•-L300
4,00	13.12	H40•-L400

***on • indicate L for Ladder, D for triangular or V for square, R for rectangular truss**

Example: H40V-L200

H40D - Allowable Loading

						MAXIMUM ALLOWABLE POINT LOADS										
		Uniformly Distributed Load				Centre Point Load				Single Load Third Points Load per Point		Single Load Fourth Points Load per Point		Single Load Fifth Points Load per Point		
SPAN		UDL		DEFLECTION		CPL		DEFLECTION		TPL		QPL		FPL		SPAN
m	ft	kg/m	lbs/ft	mm	inch	kgs	lbs	mm	inch	kgs	lbs	kgs	lbs	kgs	lbs	total weight
3	9,8	724,4	487,4	9	0,4	1048,3	2313,5	8	0,3	715,6	1579,4	581,4	1283,2	451,7	996,8	15,0
4	13,1	487,6	328,1	17	0,7	824,1	1818,9	13	0,5	573,8	1266,3	446,7	985,8	352,4	777,8	20,0
5	16,4	310,4	208,9	26	1,0	677,3	1494,8	21	0,8	477,8	1054,6	361,7	798,2	288,3	636,3	25,0
6	19,7	214,2	144,1	38	1,5	573,4	1265,4	30	1,2	408,5	901,5	303,0	668,8	243,3	536,9	30,0
7	23,0	156,2	105,1	51	2,0	495,7	1094,1	41	1,6	355,9	785,4	260,0	573,8	209,9	463,2	35,0
8	26,2	118,5	79,8	64	2,5	435,3	960,7	53	2,1	314,5	694,1	226,9	500,9	184,0	406,0	40,0
9	29,5	92,7	62,4	85	3,3	386,8	853,8	68	2,7	281,0	620,2	200,7	443,0	163,3	360,4	45,0
10	32,8	74,2	50,0	104	4,1	347,0	765,8	84	3,3	253,3	558,9	179,3	395,8	146,3	323,0	50,0
11	36,1	60,6	40,8	126	5,0	313,5	691,9	101	4,0	229,8	507,3	161,5	356,5	132,1	291,6	55,0
12	39,4	50,2	33,8	150	5,9	284,9	628,9	120	4,7	209,8	463,0	146,4	323,1	120,1	265,0	60,0
13	42,6	42,1	28,3	176	6,9	260,2	574,3	141	5,6	192,3	424,5	133,4	294,3	109,6	241,9	65,0
14	45,9	35,7	24,0	205	8,1	238,5	526,4	164	6,5	177,0	390,6	122,0	269,2	100,5	221,7	70,0
15	49,2	30,5	20,5	235	9,3	219,3	484,0	188	7,4	163,3	360,5	111,9	247,1	92,4	203,9	75,0
16	52,5	26,3	17,7	267	10,5	202,1	446,0	214	8,4	151,1	333,5	103,0	227,3	85,1	187,9	80,0
17	55,8	22,7	15,3	302	11,9	186,6	411,7	241	9,5	140,0	309,0	94,9	209,5	78,6	173,5	85,0
18	59,0	19,8	13,3	338	13,3	172,4	380,6	271	10,7	129,9	286,8	87,6	193,4	72,7	160,5	90,0
19	62,3	17,3	11,6	377	14,8	159,5	352,1	302	11,9	120,7	266,3	81,0	178,7	67,3	148,5	95,0
20	65,6	15,2	10,2	417	16,4	147,6	325,8	334	13,1	112,1	247,5	74,9	165,2	62,3	137,5	100,0

1 inch = 25,4 mm | 1m = 3.28 ft | 1 lbs = 0,453 kg

- Tüv certification only valid for loading table above.
- Loading figures are only valid for static loads.
- Loading figures are only valid for single spans with supports at both ends.
- All static systems, other than single spans, need an individual structural calculation. Please contact a structural engineer or Prolyte for assistance.
- Loading figures are calculated according to and in full compliance with European standards (Eurocode).
- The self-weight of the trusses is already taken into account.
- Loading figures are only valid for the cross sectional orientation of the truss as shown by the icon in the loading table.
- The interaction between bending moment and shear force at the connection point is already taken into account.
- Truss spans can be assembled from different truss lengths.
- Read the manual before assembling, using and loading the truss.

H40V - Allowable Loading

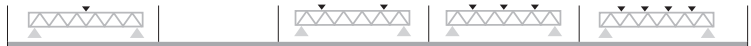

						MAXIMUM ALLOWABLE POINT LOADS										
		Uniformly Distributed Load				Centre Point Load				Single Load Third Points Load per Point		Single Load Fourth Points Load per Point		Single Load Fifth Points Load per Point		
SPAN		UDL		DEFLECTION		CPL		DEFLECTION		TPL		QPL		FPL		SPAN
m	ft	kg/m	lbs/ft	mm	inch	kgs	lbs	mm	inch	kgs	lbs	kgs	lbs	kgs	lbs	total weight
3	9,8	835,4	562,1	7	0,3	2198,9	4853,1	6	0,2	1253,2	2765,8	835,4	1843,8	626,6	1382,9	20,7
4	13,1	625,0	420,6	13	0,5	1712,4	3779,2	10	0,4	1215,1	2681,7	833,4	1839,3	625,0	1379,5	27,6
5	16,4	498,8	335,6	20	0,8	1435,8	3168,9	16	0,6	994,0	2193,8	815,2	1799,1	623,5	1376,0	34,5
6	19,7	414,6	279,0	29	1,1	1234,4	2724,4	23	0,9	851,7	1879,7	676,0	1492,0	529,7	1169,0	41,4
7	23,0	354,5	238,5	40	1,6	1080,9	2385,6	32	1,2	753,5	1663,0	585,0	1291,2	462,0	1019,6	48,3
8	26,2	277,5	186,7	52	2,0	959,8	2118,3	41	1,6	674,7	1489,0	514,7	1136,0	409,1	902,8	55,2
9	29,5	218,0	146,7	65	2,6	861,7	1901,7	52	2,1	609,9	1346,1	458,7	1012,3	366,4	808,7	62,1
10	32,8	175,4	118,0	81	3,2	780,4	1722,3	65	2,5	555,7	1226,4	412,9	911,3	331,2	731,0	69,0
11	36,1	143,9	96,8	98	3,8	711,8	1570,9	78	3,1	509,5	1124,6	374,7	827,0	301,7	665,8	75,9
12	39,4	119,9	80,7	116	4,6	653,1	1441,4	93	3,7	469,7	1036,7	342,3	755,5	276,5	610,2	82,8
13	42,6	101,2	68,1	137	5,4	602,2	1328,9	109	4,3	435,0	960,0	314,4	693,9	254,7	562,1	89,7
14	45,9	86,4	58,2	158	6,2	557,5	1230,3	127	5,0	404,3	892,3	290,1	640,3	235,6	519,9	96,6
15	49,2	74,5	50,1	182	7,2	517,9	1143,0	146	5,7	377,0	832,1	268,8	593,1	218,7	482,7	103,5
16	52,5	64,7	43,5	207	8,1	482,5	1064,9	166	6,5	352,5	778,0	249,8	551,2	203,7	449,6	110,4
17	55,8	56,6	38,1	234	9,2	450,7	994,7	187	7,4	330,4	729,2	232,7	513,7	190,2	419,7	117,3
18	59,0	49,8	33,5	262	10,3	421,8	931,0	210	8,3	310,3	684,8	217,4	479,7	178,0	392,8	124,2
19	62,3	44,1	29,7	292	11,5	395,5	872,8	233	9,2	291,9	644,1	203,4	448,9	166,8	368,2	131,1
20	65,6	39,2	26,4	323	12,7	371,3	819,5	259	10,2	274,9	606,7	190,7	420,8	156,6	345,7	138,0

1 inch = 25,4 mm | 1m = 3.28 ft | 1 lbs = 0,453 kg

- Tüv certification only valid for loading table above.
- Loading figures are only valid for static loads.
- Loading figures are only valid for single spans with supports at both ends.
- All static systems, other than single spans, need an individual structural calculation. Please contact a structural engineer or Prolyte for assistance.
- Loading figures are calculated according to and in full compliance with European standards (Eurocode).
- The self-weight of the trusses is already taken into account.
- Loading figures are only valid for the cross sectional orientation of the truss as shown by the icon in the loading table.
- The interaction between bending moment and shear force at the connection point is already taken into account.
- Truss spans can be assembled from different truss lengths.
- Read the manual before assembling, using and loading the truss.

H40R - Allowable Loading

						MAXIMUM ALLOWABLE POINT LOADS										
		Uniformly Distributed Load				Centre Point Load				Single Load Third Points Load per Point		Single Load Fourth Points Load per Point		Single Load Fifth Points Load per Point		
SPAN		UDL		DEFLECTION		CPL		DEFLECTION		TPL		QPL		FPL		SPAN
m	ft	kg/m	lbs/ft	mm	inch	kgs	lbs	mm	inch	kgs	lbs	kgs	lbs	kgs	lbs	total weight
3	9,8	835,3	562,0	7	0,3	2198,8	4852,8	6	0,2	1252,9	2765,2	835,3	1843,4	626,5	1382,6	20.7
4	13,1	624,9	420,4	13	0,5	1712,1	3778,7	10	0,4	1214,9	2681,3	833,1	1838,7	624,9	1379,1	27.6
5	16,4	498,6	335,5	20	0,8	1435,5	3168,2	16	0,6	993,8	2193,4	815,0	1798,7	623,3	1375,5	34.5
6	19,7	414,4	278,9	29	1,1	1234,1	2723,6	23	0,9	851,5	1879,2	675,8	1491,5	529,5	1168,7	41.4
7	23,0	354,3	238,4	40	1,6	1080,5	2384,6	32	1,2	753,2	1662,4	584,8	1290,6	461,8	1019,1	48.3
8	26,2	277,3	186,6	52	2,0	959,3	2117,1	41	1,6	674,4	1488,3	514,4	1135,3	408,8	902,3	55.2
9	29,5	217,8	146,5	65	2,6	861,0	1900,3	52	2,1	609,5	1345,3	458,3	1011,6	366,1	808,1	62.1
10	32,8	175,2	117,9	81	3,2	779,7	1720,7	65	2,5	555,3	1225,4	412,5	910,4	330,9	730,4	69.0
11	36,1	143,7	96,7	98	3,8	711,0	1569,2	78	3,1	509,0	1123,4	374,3	826,0	301,3	665,1	75.9
12	39,4	119,7	80,5	116	4,6	652,2	1439,4	93	3,7	469,2	1035,4	341,8	754,4	276,1	609,3	82.8
13	42,6	101,1	68,0	137	5,4	601,2	1326,8	109	4,3	434,3	958,6	313,9	692,7	254,3	561,1	89.7
14	45,9	86,3	58,0	158	6,2	556,4	1228,0	127	5,0	403,6	890,8	289,6	639,1	235,1	519,0	96.6
15	49,2	74,3	50,0	182	7,2	516,7	1140,4	146	5,7	376,3	830,4	268,1	591,8	218,2	481,7	103.5
16	52,5	64,5	43,4	207	8,1	481,3	1062,2	166	6,5	351,7	776,2	249,1	549,7	203,2	448,4	110.4
17	55,8	56,4	38,0	234	9,2	449,3	991,7	187	7,4	329,5	727,3	232,0	512,1	189,6	418,5	117.3
18	59,0	49,7	33,4	262	10,3	420,4	927,8	210	8,3	309,3	682,7	216,6	478,1	177,4	391,4	124,2
19	62,3	43,9	29,5	292	11,5	394,0	869,5	233	9,2	290,9	641,9	202,6	447,2	166,2	366,8	131,1
20	65,6	39,0	26,2	323	12,7	369,7	816,0	259	10,2	273,9	604,4	189,8	418,9	156,0	344,2	138

1 inch = 25,4 mm | 1m = 3.28 ft | 1 lbs = 0,453 kg

- Tüv certification only valid for loading table above.
- Loading figures are only valid for static loads.
- Loading figures are only valid for single spans with supports at both ends.
- All static systems, other than single spans, need an individual structural calculation. Please contact a structural engineer or Prolyte for assistance.
- Loading figures are calculated according to and in full compliance with European standards (Eurocode).
- The self-weight of the trusses is already taken into account.
- Loading figures are only valid for the cross sectional orientation of the truss as shown by the icon in the loading table.
- The interaction between bending moment and shear force at the connection point is already taken into account.
- Truss spans can be assembled from different truss lengths.
- Read the manual before assembling, using and loading the truss.

H40R - Standard available Lengths and Codes

Metres	Feet	Code*
0.25/1.00 m in 5 mm steps	0.82'/3.28', in 0.2' steps	
0,25	0.83	H40R-L025
0,50	1.90	H40R-L050
0,75	2.46	H40R-L075
1,00	3.28	H40R-L100
1,50	4.92	H40R-L150
2,00	6.56	H40R-L200
2,50	8.20	H40R-L250
3,00	9.84	H40R-L300
4,00	13.12	H40R-L400

H40L - Allowable Loading (Span supported on top chord.)

SPAN		Uniformly Distributed Load UDL		DEFLECTION		CPL		DEFLECTION	
m	ft	kg/m	lbs/ft	mm	inch	kgs	lbs	mm	inch
1	3,3	1259,8	847,7	1	0,0	1259,8	2780,4	0	0,0
2	6,6	629,0	423,2	1	0,0	629,0	1388,2	1	0,0
3	9,8	253,0	170,2	2	0,1	380,0	838,7	1	0,1
4	13,1	105,0	70,7	2	0,1	210,0	463,5	2	0,1
5	16,4	52,0	35,0	3	0,1	130,0	286,9	2	0,1
6	19,7	24,0	16,1	3	0,1	72,0	158,9	2	0,1

1 inch = 25,4 mm | 1m = 3.28 ft | 1 lbs = 0,453 kg

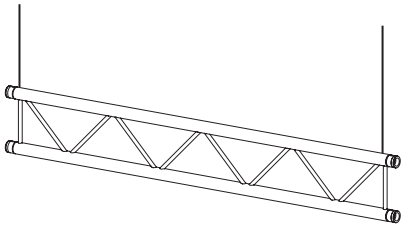

Spans must be supported at each end.
Loads must be suspended from bottom chord only.

H40L - Allowable Loading (Top chord sideways supported each metre.)

SPAN		Uniformly Distributed Load UDL		DEFLECTION		CPL		DEFLECTION	
m	ft	kg/m	lbs/ft	mm	inch	kgs	lbs	mm	inch
4	13,1	312,9	210,6	13	0,5	806,8	1780,5	10	0,4
5	16,4	249,8	168,1	20	0,8	682,7	1506,7	16	0,6
6	19,7	207,7	139,8	29	1,1	590,9	1304,1	23	0,9
7	23,0	173,4	116,7	40	1,6	520,2	1148,0	32	1,2
8	26,2	133,7	90,0	52	2,0	463,9	1023,7	41	1,6
9	29,5	106,0	71,3	65	2,6	417,9	922,4	52	2,1
10	32,8	85,8	57,7	81	3,2	379,7	838,0	65	2,5
11	36,1	70,8	47,6	98	3,8	347,3	766,5	78	3,1
12	39,4	59,2	39,9	116	4,6	319,5	705,1	93	3,7

1 inch = 25,4 mm | 1m = 3.28 ft | 1 lbs = 0,453 kg

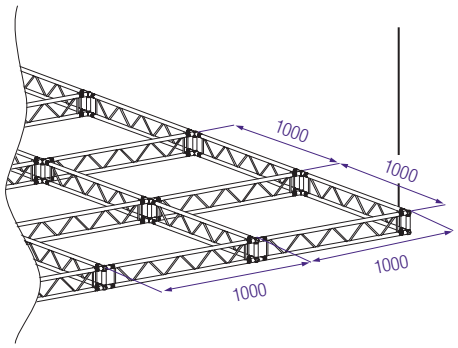

Spans must be supported at each end.
Loads must be suspended from bottom chord only.

H40L - Allowable Loading (Top chords sideways supported every 2 metres.)

SPAN		Uniformly Distributed Load UDL		DEFLECTION		CPL		DEFLECTION	
m	ft	kg/m	lbs/ft	mm	inch	kgs	lbs	mm	inch
4	13,1	156,2	105,1	4	0,1	312,5	689,6	3	0,1
5	16,4	99,0	66,6	6	0,2	247,5	546,3	5	0,2
6	19,7	67,9	45,7	8	0,3	203,8	449,8	7	0,3
7	23,0	49,2	33,1	11	0,4	172,2	380,0	9	0,3
8	26,2	37,0	24,9	14	0,6	148,1	326,9	12	0,5
9	29,5	28,7	19,3	18	0,7	129,1	285,0	15	0,6
10	32,8	22,7	15,3	23	0,9	113,6	250,8	18	0,7
11	36,1	18,3	12,3	27	1,1	100,7	222,3	22	0,9
12	39,4	15,0	10,1	33	1,3	89,8	198,1	26	1,0

1 inch = 25,4 mm | 1m = 3.28 ft | 1 lbs = 0,453 kg

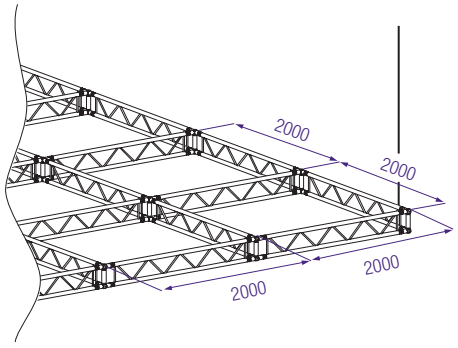

Spans must be supported at each end.
Loads must be suspended from bottom chord only.

Photo: Italstage, Italy.

System characteristics

The Prolyte Heavy-Duty truss product line consists of the S, B, C, D and M Series, ranging from the S36 to the M145 truss, all available in several profiles. They are designed as robust truss systems, with thick-walled chords, heavy-duty diagonal members and an exceptionally strong coupler system.

The main characteristics of the Heavy-Duty truss are relative compactness and ultimate strength, while a user-friendly design, durability and unrivalled loading capacities make Prolyte Heavy-Duty truss a flexible and reliable choice for many events.

System applications

The Heavy-Duty trusses are the ultimate solution for structures that have to meet high load-bearing demands and are subjected to frequent use, for example when functioning as a supporting structure or overhead rig for more complex constructions.

Their robust features make them suitable for outdoor use as well as indoor applications. All heavy-duty series are mainly used in the rental, staging, event and exhibition markets.

Coupling system

Prolyte S, B and C Series Heavy-Duty trusses use the CCS7 conical coupling system. The CCS7 allows fast, efficient and reliable coupling of trusses and corners. The D and M Series uses the pin-fork coupling system.

Photo: Prolyte. Project: Amusement park, Germany.

S36 Series truss is constructed of main chords (50 x 4 mm) and diagonal members (25 x 3 mm), and uses the CCS7 coupling system. Prolyte supplies a variety of S36 truss elements that provide maximum flexibility, including standard or custom-made lengths, circles and arches and several types of corners.
Prolyte can create custom-made pieces on request. The S36V has 4-sided diagonal webbing and can therefore handle vertical as well as horizontal loads. The S36R can handle only vertical loading. Thanks to the clever spigot pin orientation in the couplers, assembly of the truss is easy.

S36R

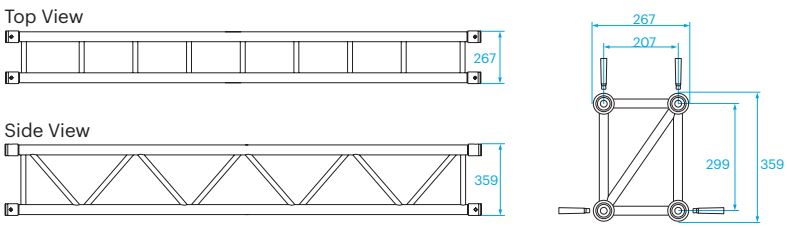

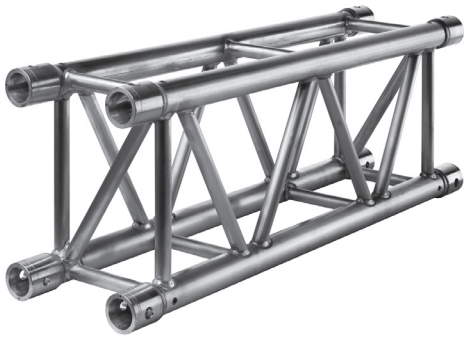

S36V

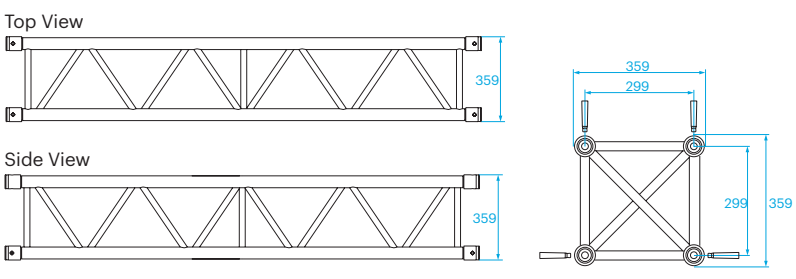

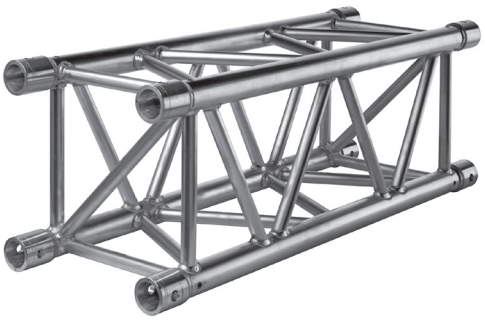

S36R - Allowable Loading

						MAXIMUM ALLOWABLE POINT LOADS										
		Uniformly Distributed Load				Centre Point Load				Single Load Third Points Load per Point		Single Load Fourth Points Load per Point		Single Load Fifth Points Load per Point		
SPAN		UDL		DEFLECTION		CPL		DEFLECTION		TPL		QPL		FPL		SPAN
m	ft	kg/m	lbs/ft	mm	inch	kgs	lbs	mm	inch	kgs	lbs	kgs	lbs	kgs	lbs	total weight
3	9,8	1533,6	1031,9	8	0,3	2270,5	5011,1	7	0,3	1471,3	3247,1	1167,6	2576,9	979,3	2161,4	31,5
4	13,1	1147,8	772,3	15	0,6	1874,3	4136,6	12	0,5	1217,2	2686,4	996,5	2199,2	822,7	1815,8	42,0
5	16,4	863,7	581,1	23	0,9	1593,3	3516,5	18	0,7	1055,9	2330,3	881,6	1945,7	693,7	1531,0	52,5
6	19,7	596,9	401,6	33	1,3	1383,3	3052,9	26	1,0	930,9	2054,6	780,4	1722,4	598,6	1321,0	63,0
7	23,0	436,0	293,4	45	1,8	1219,9	2692,3	36	1,4	831,2	1834,4	678,0	1496,3	525,4	1159,6	73,5
8	26,2	331,6	223,1	58	2,3	1088,9	2403,2	47	1,8	749,5	1654,1	598,0	1319,8	467,3	1031,2	84,0
9	29,5	260,0	175,0	74	2,9	981,3	2165,7	59	2,3	681,2	1503,5	533,7	1177,9	419,8	926,5	94,5
10	32,8	208,8	140,5	91	3,6	891,1	1966,7	73	2,9	623,2	1375,5	480,8	1061,1	380,3	839,3	105,0
11	36,1	170,9	115,0	111	4,4	814,3	1797,1	88	3,5	573,3	1265,2	436,4	963,1	346,8	765,4	115,5
12	39,4	142,1	95,6	132	5,2	747,9	1650,6	105	4,1	529,6	1168,9	398,5	879,4	318,0	701,8	126,0
13	42,6	119,7	80,5	154	6,1	689,8	1522,5	124	4,9	491,2	1084,0	365,7	807,0	292,9	646,4	136,5
14	45,9	101,9	68,6	179	7,0	638,5	1409,2	143	5,6	456,9	1008,4	336,9	743,6	270,8	597,7	147,0
15	49,2	87,6	58,9	206	8,1	592,7	1308,1	164	6,5	426,2	940,6	311,5	687,6	251,1	554,3	157,5
16	52,5	75,8	51,0	234	9,2	551,5	1217,2	187	7,4	398,4	879,2	288,9	637,5	233,5	515,3	168,0
17	55,8	66,1	44,5	264	10,4	514,2	1134,8	211	8,3	373,0	823,2	268,4	592,5	217,6	480,1	178,5
18	59,0	57,9	39,0	296	11,7	480,1	1059,6	237	9,3	349,8	772,0	249,9	551,6	203,0	448,1	189,0
19	62,3	51,0	34,3	330	13,0	448,9	990,7	264	10,4	328,4	724,7	233,0	514,3	189,8	418,8	199,5
20	65,6	45,1	30,4	365	14,4	420,0	927,0	292	11,5	308,6	681,0	217,5	480,1	177,5	391,8	210,0

1 inch = 25,4 mm | 1m = 3.28 ft | 1 lbs = 0,453 kg

- Tüv certification only valid for loading table above.
- Loading figures are only valid for static loads.
- Loading figures are only valid for single spans with supports at both ends.
- All static systems, other than single spans, need an individual structural calculation. Please contact a structural engineer or Prolyte for assistance.
- Loading figures are calculated according to and in full compliance with European standards (Eurocode).
- The self-weight of the trusses is already taken into account.
- Loading figures are only valid for the cross sectional orientation of the truss as shown by the icon in the loading table.
- The interaction between bending moment and shear force at the connection point is already taken into account.
- Truss spans can be assembled from different truss lengths.
- Read the manual before assembling, using and loading the truss.

Technical Specifications - S36 Series

Types	Rectangular (R), Square (V)
Alloy	EN AW 6082 T6
Main Chords	50 x 4 mm
Diagonal Members	25 x 3 mm
Coupling System	CCS7

Structural data can be found at www.prolyte.com

S36 Series - Standard available Lengths and Codes

Metres	Feet	Code*
0,50	1.64	S36•-L050
0,60	1.97	S36•-L060
0,80	2.62	S36•-L080
1,00	3.28	S36•-L100
1,20	3.94	S36•-L120
1,50	4.92	S36•-L150
1,60	5.25	S36•-L160
2,00	6.56	S36•-L200
2,40	7.87	S36•-L240
2,50	8.20	S36•-L250
3,00	9.84	S36•-L300
3,20	10.50	S36•-L320
4,00	13.12	S36•-L400

***on • indicate R for Rectangular, V for Square truss.**

Example: S36V-L200

S36V - Allowable Loading

						MAXIMUM ALLOWABLE POINT LOADS										
		Uniformly Distributed Load				Centre Point Load				Single Load Third Points Load per Point		Single Load Fourth Points Load per Point		Single Load Fifth Points Load per Point		
SPAN		UDL		DEFLECTION		CPL		DEFLECTION		TPL		QPL		FPL		SPAN
m	ft	kg/m	lbs/ft	mm	inch	kgs	lbs	mm	inch	kgs	lbs	kgs	lbs	kgs	lbs	total weight
3	9,8	1532,2	1031,0	8	0,3	2269,7	5009,3	7	0,3	1470,7	3245,8	1167,0	2575,6	978,8	2160,1	36
4	13,1	1146,5	771,4	15	0,6	1873,0	4133,7	12	0,5	1216,4	2684,5	995,6	2197,4	822,1	1814,3	48
5	16,4	862,3	580,2	23	0,9	1591,5	3512,5	18	0,7	1054,7	2327,7	880,4	1943,1	692,8	1528,9	60
6	19,7	595,5	400,7	33	1,3	1380,8	3047,5	26	1,0	929,4	2051,2	778,9	1719,0	597,4	1318,5	72
7	23,0	434,7	292,5	45	1,8	1216,9	2685,6	36	1,4	829,2	1830,1	676,1	1492,1	524,0	1156,5	84
8	26,2	330,3	222,2	58	2,3	1085,3	2395,2	47	1,8	747,2	1649,0	595,8	1314,9	465,6	1027,5	96
9	29,5	258,7	174,1	74	2,9	977,0	2156,3	59	2,3	678,5	1497,5	531,2	1172,3	417,9	922,3	108
10	32,8	207,5	139,6	91	3,6	886,2	1955,8	73	2,9	620,1	1368,6	477,9	1054,8	378,1	834,5	120
11	36,1	169,6	114,1	111	4,4	808,7	1784,8	88	3,5	569,7	1257,3	433,2	956,0	344,4	760,0	132
12	39,4	140,8	94,7	132	5,2	741,7	1636,9	105	4,1	525,7	1160,1	394,9	871,6	315,3	695,8	144
13	42,6	118,4	79,6	154	6,1	682,9	1507,2	124	4,9	486,7	1074,2	361,8	798,5	289,9	639,8	156
14	45,9	100,6	67,7	179	7,0	630,9	1392,5	143	5,6	452,0	997,7	332,7	734,3	267,5	590,4	168
15	49,2	86,2	58,0	206	8,1	584,5	1289,9	164	6,5	420,8	928,8	307,0	677,5	247,6	546,4	180
16	52,5	74,5	50,1	234	9,2	542,6	1197,5	187	7,4	392,6	866,4	284,0	626,7	229,7	506,9	192
17	55,8	64,7	43,6	264	10,4	504,5	1113,5	211	8,3	366,7	809,4	263,2	580,9	213,5	471,1	204
18	59,0	56,6	38,1	296	11,7	469,8	1036,8	237	9,3	343,0	757,1	244,3	539,3	198,7	438,4	216
19	62,3	49,7	33,4	330	13,0	437,8	966,3	264	10,4	321,1	708,7	227,1	501,2	185,1	408,5	228
20	65,6	43,8	29,5	365	14,4	408,3	901,1	292	11,5	300,8	663,9	211,2	466,2	172,6	380,9	240

1 inch = 25,4 mm | 1m = 3.28 ft | 1 lbs = 0,453 kg

- Tüv certification only valid for loading table above.
- Loading figures are only valid for static loads.
- Loading figures are only valid for single spans with supports at both ends.
- All static systems, other than single spans, need an individual structural calculation. Please contact a structural engineer or Prolyte for assistance.
- Loading figures are calculated according to and in full compliance with European standards (Eurocode).
- The self-weight of the trusses is already taken into account.
- Loading figures are only valid for the cross sectional orientation of the truss as shown by the icon in the loading table.
- The interaction between bending moment and shear force at the connection point is already taken into account.
- Truss spans can be assembled from different truss lengths.
- Read the manual before assembling, using and loading the truss.

Photo: Flashlight Rental bv, The Netherlands

The S36PRF and S36PRA have measurements of 360 mm height and 610 mm width and are available in different lengths. The truss has fixed cross and linear braces on the topside; the diameter is 50x4 mm for the main chords and 25x3 mm for the diagonal members and cross members. The truss can be stacked with or without the dolly. Both the truss and the dolly types are compatible and can be interchanged.
Flexible cross members in the topside of the S36PRA make it possible to mount the fixtures or bars at any required place. These braces are equipped with M12 sliding slots to facilitate placing. The stackable dollies guarantee easy handling; one person can do stacking, tipping and connection of the legs. The dolly has foldable bumpers to improve side protection.

PreRigTruss Fixed type - S36PRF + Dolly - S36PRD2

Side View

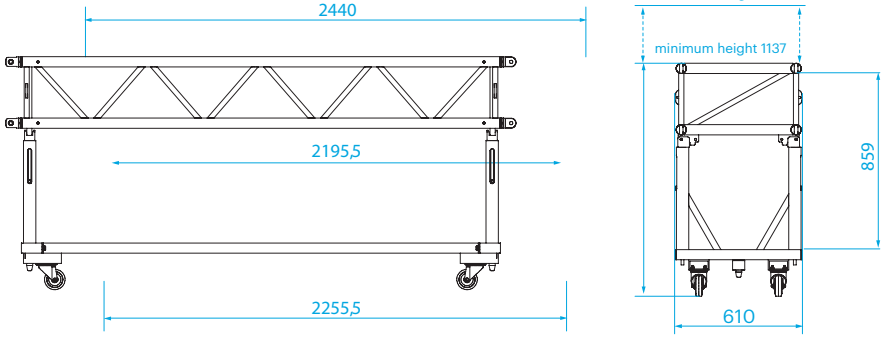

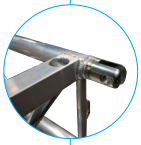

The pin-fork connection can rotate to create vertical and horizontal corners, making it possible to build spans as well as goalpost or grid configurations.

PreRigTruss Flexible type - S36PRA + WingDolly - S36PRD1

Side View

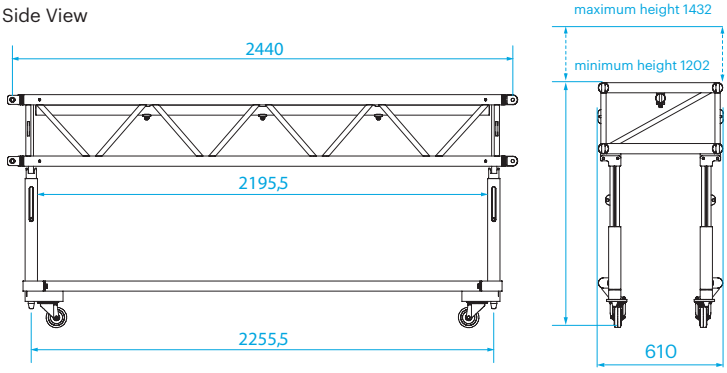

S36 PRT- Allowable Loading

		Uniformly Distributed Load				MAXIMUM ALLOWABLE POINT LOADS											
						Centre Point Load				Single Load Third Points Load per Point		Single Load Fourth Points Load per Point		Single Load Fifth Points Load per Point			
SPAN		UDL		DEFLECTION		CPL		DEFLECTION		TPL		QPL		FPL		WEIGHT	
m	ft	kg/m	lbs/ft	mm	inch	kgs	lbs	mm	inch	kgs	lbs	kgs	lbs	kgs	lbs	kgs	lbs
4	13.1	1200.6	807.8	13	0.5	2436.5	5377.3	11	0.4	1827.3	4033.0	1218.2	2688.6	1015.2	2240.5	96.7	213.0
5	16.4	770.2	518.3	21	0.8	1925.6	4249.8	17	0.7	1444.2	3187.3	962.8	2124.9	802.3	1770.7	122.9	270.7
6	19.7	526.9	354.5	30	1.2	1580.6	3488.5	24	1.0	1185.5	2616.4	790.3	1744.2	658.6	1453.5	149.1	328.4
7	23.0	380.1	255.8	41	1.6	1330.5	2936.4	33	1.3	997.9	2202.3	665.3	1468.2	554.4	1223.5	175.3	386.1
8	26.2	284.9	191.7	53	2.1	1139.6	2515.2	44	1.7	854.7	1886.4	569.8	1257.6	474.8	1048.0	201.5	443.8
9	29.5	219.6	147.8	67	2.7	988.3	2181.1	55	2.2	741.2	1635.8	494.1	1090.5	411.8	908.8	227.7	501.5
10	32.8	172.9	116.3	83	3.3	864.5	1908.1	69	2.7	648.4	1431.0	432.3	954.0	360.2	795.0	253.9	559.3
11	36.1	138.4	93.1	101	4.0	760.9	1679.4	84	3.3	570.7	1259.5	380.5	839.7	317.1	699.7	280.1	617.0
12	39.4	112.1	75.4	120	4.7	672.4	1484.0	101	4.0	504.3	1113.0	336.2	742.0	280.2	618.3	306.3	674.7
13	42.6	91.6	61.6	141	5.5	595.5	1314.3	119	4.7	446.6	985.7	297.8	657.1	248.1	547.6	332.5	732.4
14	45.9	75.4	50.7	163	6.4	527.7	1164.6	139	5.5	395.8	873.5	263.9	582.3	219.9	485.3	358.7	790.1
15	49.2	62.3	41.9	187	7.4	467.2	1031.1	161	6.3	350.4	773.3	233.6	515.6	194.7	429.6	384.9	847.8
16	52.5	51.6	34.7	213	8.4	412.6	910.6	185	7.3	309.5	683.0	206.3	455.3	171.9	379.4	411.1	905.5
17	55.8	42.7	28.7	241	9.5	362.9	801.0	211	8.3	272.2	600.7	181.5	400.5	151.2	333.7	437.3	963.2
18	59.0	35.3	23.7	270	10.6	317.3	700.2	239	9.4	238.0	525.2	158.6	350.1	132.2	291.8	463.5	1020.9
19	62.3	29.0	19.5	301	11.8	275.1	607.1	269	10.6	206.3	455.3	137.5	303.5	114.6	253.0	489.7	1078.6
20	65.6	23.6	15.9	333	13.1	235.8	520.4	302	11.9	176.8	390.3	117.9	260.2	98.2	216.8	515.9	1136.3

1 inch = 25,4 mm | 1m = 3.28 ft | 1 lbs = 0,453 kg

WHEN DOLLIES ARE NOT MOUNTED ON THE TRUSS THE LOADING COULD BE INCREASED WITH 12 KG PER METER

- Tüv certification only valid for loading table above.
- Loading figures are only valid for static loads.
- Loading figures are only valid for single spans with supports at both ends.
- All static systems, other than single spans, need an individual structural calculation. Please contact a structural engineer or Prolyte for assistance.
- Loading figures are calculated according to and in full compliance with European standards (Eurocode).
- The self-weight of the trusses is already taken into account.
- Loading figures are only valid for the cross sectional orientation of the truss as shown by the icon in the loading table.
- The interaction between bending moment and shear force at the connection point is already taken into account.
- Truss spans can be assembled from different truss lengths.
- Read the manual before assembling, using and loading the truss.

Technical Specifications - PreRigTruss	
Types	Pre rig
Alloy	EN AW 6082 T6
Main Chords	50 x 4 mm
Diagonal Members	25 x 3 mm
Coupling System	Rotatable Pin/fork

Structural data can be found at www.prolyte.com

CODE	DESCRIPTION	WEIGHT
S36PRF-L122	PreRigTruss, fixed, length 4ft	28 kg
S36PRF-L244	PreRigTruss, fixed, length 8ft	36 kg
S36PRF-L305	PreRigTruss, fixed, length 10ft	43 kg
S36PRA-L122	PreRigTruss, flexable, length 4ft	23 kg
S36PRA-L244	PreRigTruss, flexable, length 8ft	35 kg
S36PRA-L305	PreRigTruss, flexable, length 10ft	42 kg
S36PRD1-L122	Dolly for S36PR truss, wing type, length 4ft	12.5 kg
S36PRD1-L244	Dolly for S36PR truss, wing type, length 8ft	13.5 kg
S36PRD1-L305	Dolly for S36PR truss, wing type, length 10ft	14.5 kg
S36PRD2-L122	Dolly for S36PR truss, length 4ft	34 kg
S36PRD2-L244	Dolly for S36PR truss, length 8ft	38 kg
S36PRD2-L305	Dolly for S36PR truss, length 10ft	40 kg
S36PRA-T-122	extra tube for PRT 2 4ft incl bolts and nuts	2.4 kg
S36PRA-T-244	extra tube for PRT 2 8ft incl bolts and nuts	4 kg
S36PRA-T-305	extra tube for PRT 2 10ft incl bolts and nuts	4.9 kg
	pins to connect trusses (4 per type needed)	
ACC-LP-16	LOCKING PIN FOR CCS6-HINGE	
CCS7-705	SPIGOT R-SPRING, CCS 700	
ACC-LP-10	Removable pin with clip for legs dollies	

S52 Series truss is constructed of main chords (50 x 4 mm) and diagonal members (25 x 3 mm) (S52F) or 30 x 3mm (S52V and SV), and uses the CCS7 coupling system. Prolyte supplies a variety of S52 Series truss elements that provide maximum flexibility, including standard or custom-made lengths, circles and arches and several types of corners. Prolyte can create custom-made pieces on request. For obvious reasons, the S52F is not available in curved sections.

The S52SV has 4-sided diagonal webbing and can therefore handle vertical as well as horizontal loads. The S52V/S52F can only handle vertical loading. The S52F folding truss can save up to 70-80% of warehouse and truck space, while the smart placing of the hinges reduces the risk of hand and finger injuries. Thanks to the clever spigot pin orientation in the couplers, assembly of the truss is easy.

S52SV - S52V

Top View S52SV

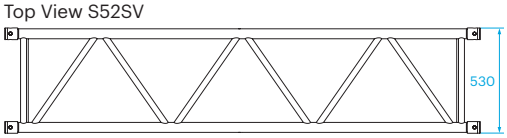

Top View S52V

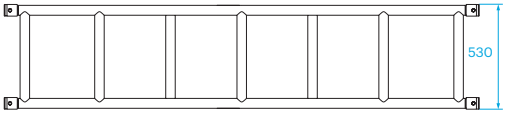

Side View S52SV - S52V

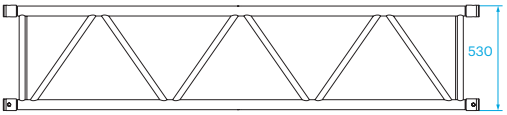

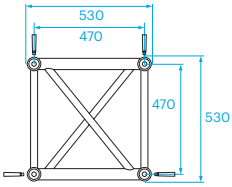

S52F

Top View

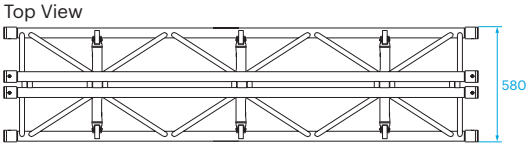

Side View

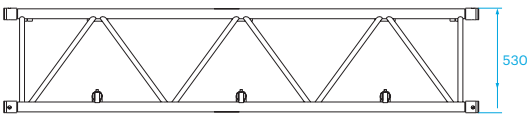

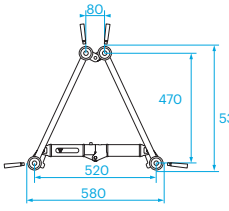

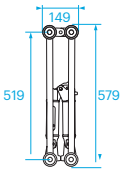

S52SV

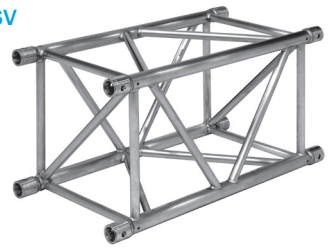

S52V

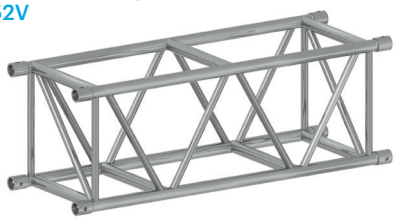

S52F

S52F - Allowable Loading

SPAN		Uniformly Distributed Load		DEFLECTION		MAXIMUM ALLOWABLE POINT LOADS										SPAN
		UDL				Centre Point Load CPL		DEFLECTION		Single Load Third Points Load per Point TPL		Single Load Fourth Points Load per Point QPL		Single Load Fifth Points Load per Point FPL		
m	ft	kg/m	lbs/ft	mm	inch	kgs	lbs	mm	inch	kgs	lbs	kgs	lbs	kgs	lbs	total weight
2,4	7,9	1049,2	706,0	3	0,1	2060,3	4547,1	2	0,1	1030,2	2273,6	686,8	1515,7	515,1	1136,8	28,8
3,6	11,8	697,5	469,3	7	0,3	1895,7	4183,8	5	0,2	1027,2	2267,1	684,8	1511,4	513,6	1133,6	43,2
4,8	15,7	663,9	446,7	12	0,5	1574,1	3474,0	10	0,4	983,7	2170,9	655,8	1447,3	486,7	1074,1	57,6
6,0	19,7	529,6	356,4	19	0,7	1253,4	2766,3	15	0,6	940,1	2074,8	626,7	1383,2	459,7	1014,6	72
7,2	23,6	432,7	291,2	27	1,1	1038,6	2292,2	22	0,8	778,9	1719,1	519,3	1146,1	432,7	955,1	86,4
8,4	27,6	357,9	240,8	37	1,4	884,2	1951,4	29	1,2	663,2	1463,6	442,1	975,7	368,4	813,1	100,8
9,6	31,5	303,8	204,4	48	1,9	767,6	1694,1	38	1,5	575,7	1270,6	383,8	847,1	319,8	705,9	115,2
10,8	35,4	237,9	160,1	61	2,4	743,8	1641,6	49	1,9	557,9	1231,2	371,9	820,8	309,9	684,0	129,6
12,0	39,4	200,8	135,1	75	2,9	722,9	1595,4	60	2,4	542,2	1196,6	361,5	797,7	301,2	664,8	144
13,2	43,3	164,1	110,4	91	3,6	703,9	1553,5	72	2,9	527,9	1165,1	352,0	776,8	293,3	647,3	158,4
14,4	47,2	136,1	91,6	108	4,2	686,2	1514,4	86	3,4	514,6	1135,8	343,1	757,2	285,9	631,0	172,8
15,6	51,2	114,4	77,0	126	5,0	624,7	1378,7	101	4,0	468,5	1034,0	312,3	689,3	260,3	574,4	187,2
16,8	55,1	97,2	65,4	147	5,8	571,3	1260,9	117	4,6	428,5	945,7	285,7	630,4	238,0	525,4	201,6
18,0	59,0	83,2	56,0	168	6,6	561,9	1240,2	135	5,3	421,4	930,1	281,0	620,1	234,1	516,7	216
19,2	63,0	71,9	48,4	192	7,5	551,9	1218,0	153	6,0	413,9	913,5	275,9	609,0	229,9	507,5	230,4
20,4	66,9	62,4	42,0	216	8,5	509,3	1124,1	173	6,8	382,0	843,1	254,7	562,1	212,2	468,4	244,8
21,6	70,8	54,5	36,7	242	9,5	471,0	1039,4	194	7,6	353,2	779,6	235,5	519,7	196,2	433,1	259,2

1 inch = 25,4 mm | 1m = 3.28 ft | 1 lbs = 0,453 kg

- Tüv certification only valid for loading table above.
- Loading figures are only valid for static loads.
- Loading figures are only valid for single spans with supports at both ends.
- All static systems, other than single spans, need an individual structural calculation. Please contact a structural engineer or Prolyte for assistance.
- Loading figures are calculated according to and in full compliance with European standards (Eurocode).
- The self-weight of the trusses is already taken into account.
- Loading figures are only valid for the cross sectional orientation of the truss as shown by the icon in the loading table.
- The interaction between bending moment and shear force at the connection point is already taken into account.
- Truss spans can be assembled from different truss lengths.
- Read the manual before assembling, using and loading the truss.

Technical Specifications - S52 Series

Types	Folding (F), Square (V)
Alloy	EN AW 6082 T6
Main Chords	50 x 4 mm
Diagonal Members	S52F - 25 x 3 mm S52V/SV - 30 x 3 mm
Coupling System	CCS7

Structural data can be found at www.prolyte.com

S52V / S52SV / S52F - Standard available Lengths and Codes

Metres	Feet	Code*	
0,60	1.97	S52•-L060	S52F-L060
0,80	2.62	S52•-L080	S52F-L080
1,00	3.28	S52•-L100	
1,20	3.94	S52•-L120	S52F-L120
1,50	4.92	S52•-L150	
1,60	5.25	S52•-L160	S52F-L160
2,00	6.56	S52•-L200	
2,40	7.87	S52•-L240	S52F-L240
2,50	8.20	S52•-L250	
3,00	9.84	S52•-L300	
3,20	10.50	S52•-L320	
4,00	13.12	S52•-L400	

***on • indicate V for Square and SV for Square truss with 4-sided webbing. Example: S52V-L200**

S52V - Allowable Loading

						MAXIMUM ALLOWABLE POINT LOADS										
		Uniformly Distributed Load				Centre Point Load				Single Load Third Points Load per Point		Single Load Fourth Points Load per Point		Single Load Fifth Points Load per Point		
SPAN		UDL		DEFLECTION		CPL		DEFLECTION		TPL		QPL		FPL		SPAN
m	ft	kg/m	lbs/ft	mm	inch	kgs	lbs	mm	inch	kgs	lbs	kgs	lbs	kgs	lbs	total weight
3	9,8	1880,2	1265,1	5	0,2	2962,7	6538,7	4	0,2	1863,5	4112,8	1410,7	3113,4	1144,2	2525,2	45,0
4	13,1	1406,8	946,6	9	0,4	2526,0	5574,9	7	0,3	1584,5	3496,9	1239,4	2735,3	1028,6	2270,1	60,0
5	16,4	1122,7	755,5	14	0,5	2198,7	4852,4	11	0,4	1394,6	3078,0	1115,6	2462,2	931,1	2055,0	75,0
6	19,7	895,7	602,7	20	0,8	1943,7	4289,6	16	0,6	1254,9	2769,7	1020,4	2252,0	854,2	1885,1	90,0
7	23,0	654,5	440,4	27	1,1	1738,9	3837,8	22	0,9	1139,2	2514,2	938,8	2072,0	759,5	1676,3	105,0
8	26,2	497,9	335,0	36	1,4	1570,6	3466,3	29	1,1	1041,5	2298,6	868,0	1915,6	682,6	1506,5	120,0
9	29,5	390,6	262,8	45	1,8	1429,4	3154,7	36	1,4	957,8	2113,9	805,7	1778,3	618,6	1365,3	135,0
10	32,8	313,8	211,2	56	2,2	1309,1	2889,1	45	1,8	885,2	1953,6	733,5	1618,8	564,6	1246,0	150,0
11	36,1	257,0	172,9	68	2,7	1205,0	2659,5	54	2,1	821,4	1812,9	668,8	1476,0	518,1	1143,5	165,0
12	39,4	213,8	143,9	80	3,2	1114,0	2458,6	64	2,5	764,9	1688,1	613,2	1353,3	477,8	1054,4	180,0
13	42,6	180,2	121,2	94	3,7	1033,5	2281,0	76	3,0	714,3	1576,5	564,8	1246,4	442,2	976,0	195,0
14	45,9	153,5	103,3	109	4,3	961,7	2122,5	88	3,4	668,7	1475,9	522,1	1152,4	410,7	906,4	210,0
15	49,2	132,0	88,8	126	4,9	897,1	1979,9	101	4,0	627,4	1384,6	484,3	1068,8	382,5	844,1	225,0
16	52,5	114,4	76,9	143	5,6	838,5	1850,7	114	4,5	589,6	1301,2	450,3	993,9	357,0	787,8	240,0
17	55,8	99,8	67,1	161	6,4	785,1	1732,8	129	5,1	554,9	1224,6	419,7	926,2	333,8	736,7	255,0
18	59,0	87,5	58,9	181	7,1	736,1	1624,6	145	5,7	522,8	1153,8	391,8	864,6	312,6	689,9	270,0
19	62,3	77,2	51,9	202	7,9	690,9	1524,8	161	6,4	493,0	1088,0	366,2	808,3	293,1	646,9	285,0
20	65,6	68,3	46,0	223	8,8	648,9	1432,2	179	7,0	465,2	1026,7	341,7	754,0	275,1	607,1	300,0

1 inch = 25,4 mm | 1m = 3.28 ft | 1 lbs = 0,453 kg

- Tüv certification only valid for loading table above.
- Loading figures are only valid for static loads.
- Loading figures are only valid for single spans with supports at both ends.
- All static systems, other than single spans, need an individual structural calculation. Please contact a structural engineer or Prolyte for assistance.
- Loading figures are calculated according to and in full compliance with European standards (Eurocode).
- The self-weight of the trusses is already taken into account.
- Loading figures are only valid for the cross sectional orientation of the truss as shown by the icon in the loading table.
- The interaction between bending moment and shear force at the connection point is already taken into account.
- Truss spans can be assembled from different truss lengths.
- Read the manual before assembling, using and loading the truss.

S52SV - Allowable Loading

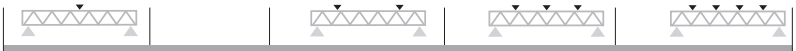

						MAXIMUM ALLOWABLE POINT LOADS										
		Uniformly Distributed Load				Centre Point Load				Single Load Third Points Load per Point		Single Load Fourth Points Load per Point		Single Load Fifth Points Load per Point		
SPAN		UDL		DEFLECTION		CPL		DEFLECTION		TPL		QPL		FPL		SPAN
m	ft	kg/m	lbs/ft	mm	inch	kgs	lbs	mm	inch	kgs	lbs	kgs	lbs	kgs	lbs	total weight
3	9,8	1880,2	1265,1	5	0,2	2946,1	6501,9	4	0,2	1863,5	4112,8	1410,7	3113,4	1144,2	2525,2	45,0
4	13,1	1406,8	946,6	9	0,4	2505,6	5529,8	7	0,3	1584,5	3496,9	1239,4	2735,3	1028,6	2270,1	60,0
5	16,4	1122,7	755,5	15	0,6	2179,5	4810,2	12	0,5	1384,5	3055,5	1109,0	2447,6	927,3	2046,5	75,0
6	19,7	933,4	628,0	21	0,8	1925,9	4250,5	17	0,7	1245,2	2748,1	1013,9	2237,7	846,0	1867,2	90,0
7	23,0	686,7	462,1	29	1,1	1722,6	3801,8	23	0,9	1129,9	2493,8	932,5	2058,1	752,1	1660,0	105,0
8	26,2	522,6	351,7	37	1,5	1555,6	3433,2	30	1,2	1032,8	2279,4	862,0	1902,4	675,9	1491,6	120,0
9	29,5	410,1	275,9	47	1,9	1415,7	3124,5	38	1,5	949,7	2096,1	800,1	1765,8	612,6	1351,9	135,0
10	32,8	329,6	221,8	59	2,3	1296,6	2861,6	47	1,8	877,7	1937,1	725,7	1601,6	559,1	1233,9	150,0
11	36,1	270,1	181,7	71	2,8	1193,7	2634,6	57	2,2	814,5	1797,6	661,8	1460,7	513,2	1132,6	165,0
12	39,4	224,8	151,2	84	3,3	1103,8	2436,1	67	2,7	758,6	1674,1	607,0	1339,7	473,3	1044,6	180,0
13	42,6	189,5	127,5	99	3,9	1024,4	2260,8	79	3,1	708,6	1563,8	559,3	1234,4	438,3	967,3	195,0
14	45,9	161,6	108,7	115	4,5	953,6	2104,5	92	3,6	663,6	1464,5	517,3	1141,8	407,2	898,7	210,0
15	49,2	139,0	93,5	132	5,2	889,9	1964,0	105	4,1	622,7	1374,4	480,1	1059,5	379,4	837,3	225,0
16	52,5	120,5	81,1	150	5,9	832,3	1836,8	120	4,7	585,5	1292,1	446,7	985,9	354,3	781,9	240,0
17	55,8	105,2	70,8	169	6,7	779,7	1720,8	135	5,3	551,3	1216,7	416,6	919,4	331,5	731,6	255,0
18	59,0	92,4	62,2	190	7,5	731,5	1614,5	152	6,0	519,7	1147,0	389,2	858,9	310,7	685,6	270,0
19	62,3	81,5	54,9	211	8,3	687,1	1516,5	169	6,7	490,4	1082,4	364,1	803,7	291,5	643,4	285,0
20	65,6	72,3	48,6	234	9,2	646,0	1425,7	187	7,4	463,2	1022,2	341,1	752,9	273,8	604,4	300,0

1 inch = 25,4 mm | 1m = 3.28 ft | 1 lbs = 0,453 kg

- Tüv certification only valid for loading table above.
- Loading figures are only valid for static loads.
- Loading figures are only valid for single spans with supports at both ends.
- All static systems, other than single spans, need an individual structural calculation. Please contact a structural engineer or Prolyte for assistance.
- Loading figures are calculated according to and in full compliance with European standards (Eurocode).
- The self-weight of the trusses is already taken into account.
- Loading figures are only valid for the cross sectional orientation of the truss as shown by the icon in the loading table.
- The interaction between bending moment and shear force at the connection point is already taken into account.
- Truss spans can be assembled from different truss lengths.
- Read the manual before assembling, using and loading the truss.

Photo: Italstage, Italy.

S66 Series truss is constructed of main chords (50 x 4 mm) and diagonal members (30 x 3 mm), and uses the CCS7 coupling system. Both the S66R and S66V have two-sided webbing and are capable of absorbing vertical loads only.
Prolyte supplies a variety of S66 Series truss elements that provide maximum flexibility, including standard or custom-made lengths, circles and arches and several types of corners. Prolyte can create custom-made pieces on request.

S66R

Top View

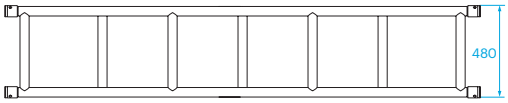

Side View

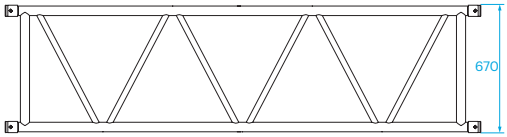

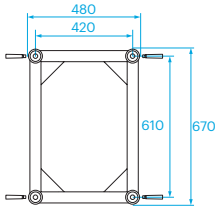

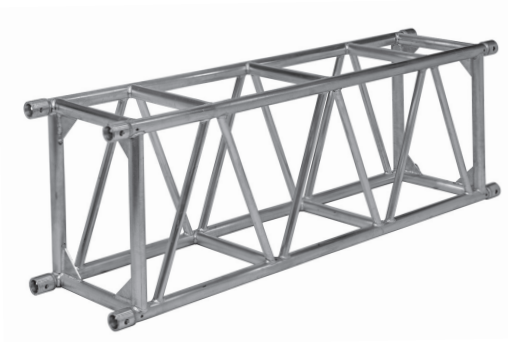

S66V

Top View

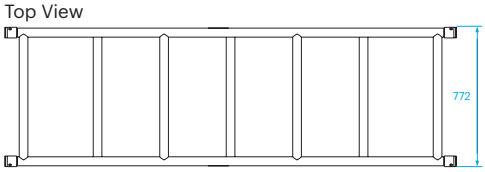

Side View

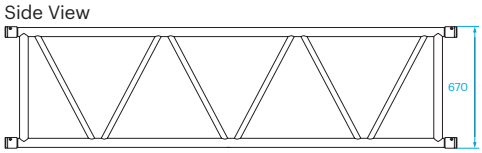

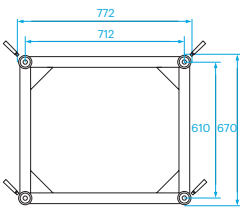

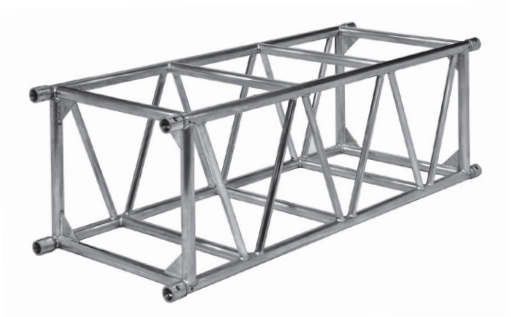

S66R and S66V - Allowable Loading

SPAN		Uniformly Distributed Load UDL		DEFLECTION		MAXIMUM ALLOWABLE POINT LOADS Centre Point Load CPL		DEFLECTION		Single Load Third Points Load per Point TPL		Single Load Fourth Points Load per Point QPL		Single Load Fifth Points Load per Point FPL		SPAN
m	ft	kg/m	lbs/ft	mm	inch	kgs	lbs	mm	inch	kgs	lbs	kgs	lbs	kgs	lbs	total weight
6	19,7	1012,0	681,0	16	0,6	2286,7	5046,7	13	0,5	1441,1	3180,5	1145,5	2528,1	952,8	2102,9	102,0
7	23,0	865,3	582,2	22	0,9	2065,1	4557,7	18	0,7	1321,4	2916,4	1064,9	2350,3	893,9	1972,9	119,0
8	26,2	680,5	457,9	29	1,1	1880,3	4149,7	23	0,9	1218,8	2689,8	993,7	2193,2	824,3	1819,2	136,0
9	29,5	534,5	359,6	37	1,4	1723,4	3803,6	29	1,2	1129,6	2493,0	930,3	2053,2	752,0	1659,6	153,0
10	32,8	430,0	289,3	45	1,8	1588,4	3505,6	36	1,4	1051,3	2320,2	873,3	1927,4	690,2	1523,3	170,0
11	36,1	352,7	237,3	55	2,2	1470,8	3245,9	44	1,7	981,9	2167,0	821,7	1813,6	636,9	1405,5	187,0
12	39,4	294,0	197,8	65	2,6	1367,1	3017,3	52	2,0	919,8	2030,1	770,2	1699,7	590,2	1302,5	204,0
13	42,6	248,2	167,0	76	3,0	1275,0	2813,9	61	2,4	863,9	1906,7	712,2	1571,8	548,9	1211,4	221,0
14	45,9	211,9	142,6	89	3,5	1192,4	2631,7	71	2,8	813,2	1794,8	661,0	1458,9	512,1	1130,3	238,0
15	49,2	182,6	122,9	102	4,0	1117,8	2467,1	81	3,2	767,0	1692,7	615,5	1358,4	479,1	1057,3	255,0
16	52,5	158,7	106,8	116	4,6	1050,0	2317,4	93	3,6	724,5	1599,0	574,6	1268,2	449,2	991,3	272,0
17	55,8	138,8	93,4	131	5,1	988,0	2180,6	104	4,1	685,4	1512,6	537,7	1186,7	421,9	931,1	289,0
18	59,0	122,1	82,2	146	5,8	931,0	2054,7	117	4,6	649,1	1432,5	504,1	1112,5	396,9	876,0	306,0
19	62,3	108,1	72,7	163	6,4	878,3	1938,3	131	5,1	615,3	1357,9	473,3	1044,6	374,0	825,3	323,0
20	65,6	96,0	64,6	181	7,1	829,3	1830,3	145	5,7	583,7	1288,2	445,0	982,1	352,7	778,4	340,0
21	68,9	85,7	57,7	199	7,8	783,7	1729,6	159	6,3	554,1	1222,9	418,8	924,4	332,9	734,7	357,0
22	72,2	76,7	51,6	219	8,6	741,0	1635,3	175	6,9	526,2	1161,3	394,5	870,7	314,5	694,0	374,0
23	75,4	68,9	46,3	239	9,4	700,8	1546,7	191	7,5	499,9	1103,2	371,9	820,7	297,2	655,8	391,0
24	78,7	62,0	41,7	260	10,2	663,0	1463,3	208	8,2	474,9	1048,1	350,6	773,8	280,9	620,0	408,0

1 inch = 25,4 mm | 1m = 3.28 ft | 1 lbs = 0,453 kg

- Tüv certification only valid for loading table above.
- Loading figures are only valid for static loads.
- Loading figures are only valid for single spans with supports at both ends.
- All static systems, other than single spans, need an individual structural calculation. Please contact a structural engineer or Prolyte for assistance.
- Loading figures are calculated according to and in full compliance with European standards (Eurocode).
- The self-weight of the trusses is already taken into account.
- Loading figures are only valid for the cross sectional orientation of the truss as shown by the icon in the loading table.
- The interaction between bending moment and shear force at the connection point is already taken into account.
- Truss spans can be assembled from different truss lengths.
- Read the manual before assembling, using and loading the truss.

Technical Specifications - S66 Series

Types	Rectangular (R), Square (V)
Alloy	EN AW 6082 T6
Main Chords	50 x 4 mm
Diagonal Members	30 x 3 mm
Coupling System	CCS7

Structural data can be found at www.prolyte.com

S66 Series - Standard available Lengths and Codes

Metres	Feet	Code*
0.50/1.00 m in 5 mm steps	0.82'/3.28', in 0.2' steps	
1,00	3.28	S66•-L100
1,50	4.92	S66•-L150
1,74*	5.71	S66•-L174
2,00	6.56	S66•-L200
2,50*	8.20	S66•-L250
3,00	9.84	S66•-L300
3,26*	10.69	S66•-L326
4,00	13.12	S66•-L400

***on • indicate R for Rectangular, V for Square truss.**

Example: S66V-L200

Photo: AED RENT, Belgium. Project: Fashion show.

S100F truss is constructed of main chords (50 x 4 mm), diagonal members (48 x 3 mm), and uses the CCS7 coupling system. Prolyte supplies a variety of S100F truss elements that provide maximum flexibility, including standard or custom-made lengths and several types of corners. Prolyte can create custom-made pieces on request. For obvious reasons, the S100F is not available in curved sections. Increased truss height and larger diagonal members make it possible to assemble spans of up to 30 metres. This truss is suited for vertical loading only. The geometry of the bracing makes it possible to combine the S100F truss with the S52F or S36R truss. Extra horizontal members are welded between the diagonal members to make it possible for technicians to climb the truss. The S100F Series folding truss can save up to 70/80% of warehouse and truck space, while the smart placing of the hinges prevents personal injuries. Thanks to the clever spigot pin orientation in the couplers, assembly of the truss is easy.

S100F

Top View

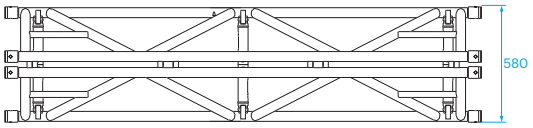

Side View

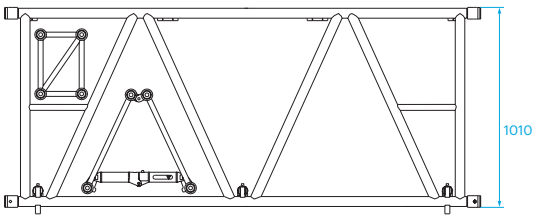

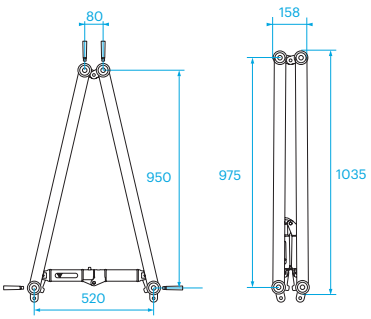

S100F - Allowable Loading

SPAN		Uniformly Distributed Load		DEFLECTION		MAXIMUM ALLOWABLE POINT LOADS										SPAN
		UDL				Centre Point Load				Single Load Third Points Load per Point		Single Load Fourth Points Load per Point		Single Load Fifth Points Load per Point		
						CPL		DEFLECTION		TPL		QPL		FPL		
m	ft	kg/m	lbs/ft	mm	inch	kgs	lbs	mm	inch	kgs	lbs	kgs	lbs	kgs	lbs	total weight
2,4	7,9	828,9	557,7	2	0,1	2023,7	4466,3	1	0,1	1011,8	2233,1	674,6	1488,8	505,9	1116,6	42,7
4,8	15,7	427,3	287,5	7	0,3	1932,9	4265,9	5	0,2	1002,9	2213,4	668,6	1475,6	499,7	1102,7	85,4
7,2	23,6	285,5	192,1	15	0,6	1608,2	3549,3	12	0,5	993,9	2193,6	662,6	1462,4	493,4	1088,9	128,2
9,6	31,5	209,1	140,7	27	1,1	1438,5	3174,8	21	0,8	985,0	2173,8	656,6	1449,2	487,1	1075,1	170,9
12,0	39,4	169,4	114,0	42	1,6	1301,3	2872,0	33	1,3	976,0	2154,0	650,7	1436,0	480,9	1061,3	213,6
14,4	47,2	139,7	94,0	60	2,4	1237,4	2730,9	48	1,9	928,1	2048,2	618,7	1365,5	474,6	1047,5	256,6
16,8	55,1	115,0	77,4	82	3,2	1124,0	2480,8	66	2,6	843,0	1860,6	562,0	1240,4	468,4	1033,6	299,0
19,2	63,0	96,8	65,1	107	4,2	1031,6	2276,8	86	3,4	773,7	1707,6	515,8	1138,4	429,8	948,7	341,8
21,6	70,8	79,5	53,5	136	5,3	929,8	2052,1	109	4,3	697,3	1539,0	464,9	1026,0	387,4	855,0	384,5
24,0	78,7	67,7	45,6	167	6,6	812,8	1793,9	134	5,3	609,6	1345,4	406,4	896,9	338,7	747,4	427,2
26,4	86,6	58,3	39,2	203	8,0	790,7	1745,0	162	6,4	593,0	1308,8	395,3	872,5	329,4	727,1	469,9
28,8	94,5	52,2	35,1	241	9,5	728,1	1606,9	193	7,6	546,1	1205,2	364,0	803,4	303,4	669,5	512,6
31,2	102,3	44,0	29,6	283	11,1	644,0	1421,4	226	8,9	483,0	1066,1	322,0	710,7	268,4	592,3	555,4
33,6	110,2	38,0	25,6	328	12,9	569,9	1257,8	263	10,3	427,4	943,4	285,0	628,9	237,5	524,1	598,2
36,0	118,1	32,7	22,0	360	14,2	547,4	1208,1	301	11,9	410,5	906,1	273,7	604,1	228,1	503,4	641,0

1 inch = 25,4 mm | 1m = 3.28 ft | 1 lbs = 0,453 kg

- Tüv certification only valid for loading table above.
- Loading figures are only valid for static loads.
- Loading figures are only valid for single spans with supports at both ends.
- All static systems, other than single spans, need an individual structural calculation. Please contact a structural engineer or Prolyte for assistance.
- Loading figures are calculated according to and in full compliance with European standards (Eurocode).
- The self-weight of the trusses is already taken into account.
- Loading figures are only valid for the cross sectional orientation of the truss as shown by the icon in the loading table.
- The interaction between bending moment and shear force at the connection point is already taken into account.
- Truss spans can be assembled from different truss lengths.
- Read the manual before assembling, using and loading the truss.

Technical Specifications - S100F

Types	Folding (F)
Alloy	EN AW 6082 T6
Main Chords	50 x 4 mm
Diagonal members	48 x 3 mm
Coupling System	CCS7

Structural data can be found at www.prolyte.com

S100F - Standard available Lengths and Codes

Metres	Feet	Code
0,74	3.28	S100F-L074
0,80	2.62	S100F-L080
1,20	3.94	S100F-L120
1,60	5.25	S100F-L160
2,40	7,87	S100F-L240

Other Lengths on request

BGR70 TRUSS

BGR70 A low volume truss with extreme load bearing capacity.

The BGR70 truss is designed to create large spans that can hold heavy loads. Compared to conventional B100RV Series truss systems, the BGR70 truss is 40% stronger and safes up to 35% transport volume. Rectangular profiles create a truss that can be used for spans up to 45 metres, still allowing a centre point load of 750 kg.

Application scope

Due to its low volume and height, combined with a high load bearing capacity, the BGR70 truss is extremely suitable as a mother grid, or to support a front façade for large sets, like on dance festivals. Due to its zero deflection, the BGR70 truss is ideal in applications with motion or LED screens.

BGR70 benefits:

- Tool-less system, no tools needed for assembly and disassembly
- Low volume element – reduces transport volume and storage costs
- Integration for dolly and lifting bracket
- Zero deflection, due to pre-camber system. Ideal for motion or LED applications.
- Strong and compact – loads up to 3300kg on a 20 m span.
- Integration to accommodate cross trusses
- Designed in compliance with Eurocodes, manufactured following EN1090 standards.
- Can be stacked to 3-units height to facilitate transport inside the truss span, thereby reducing total trim-height.

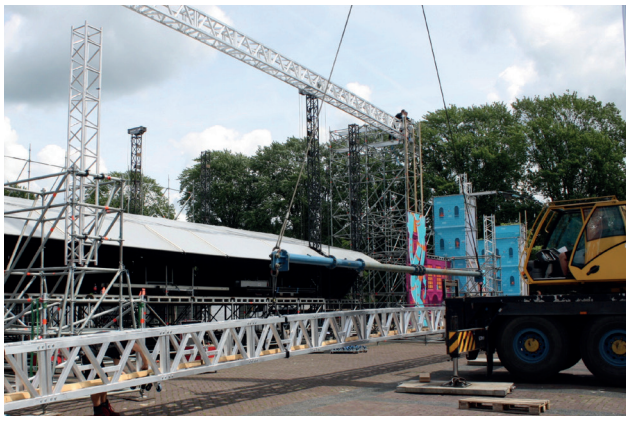

Flexible options

The BGR70 truss can easily accommodate 30-series truss. The spacing of the braces is designed to facilitate the placing of 30-series truss in between the bracing. Perfect for pre-rig applications or when constructing mother grids.
The removable wheel dollies facilitate handling and transport. When rigged, the dolly can be removed or replaced to guarantee a clean look.

Integrated hoist adapter

A special hoist adapter is designed for the BGR70 truss. This adapter can be used either at the end of span or in between two truss sections, offering a fully integrated suspension system. The hoist can be mounted above or inside the truss span, thereby reducing total trim-height.

Indoor and outdoor application

Due to its 4-sided webbing the BGR70 truss can be used in vertical as well as a horizontal plane, or a combination of these. Creating possibilities for outdoor and indoor applications, as well as combinations in 2 or 3 dimensional structures.

BGR70 accessories	
Wheel dolly	BGR70-DOLLY-01
Lifting bracket	BGR70-LIFT-01
Rigging bracket	BGR70-RIG-01

Zero deflection due to pre-cambering

Using the unique pre-camber options, you can create an absolute straight truss span. Using the BGR70 truss with pre-camber options, you can create an absolute straight truss span. Depending on the applied load, a combination of spacers ranging from 0mm to 4 mm can create a pre-camber effect that will result in zero deflection, despite the applied loading. This is a great feature when using motion or led screens.

The loading table is for regular use – without any pre-camber effect.

Intermediate values can be found by interpolating, taking the following variable values into account:

- Span
- Load applied
- Spacers types used
- Allowable deflection

BGR70

Top View

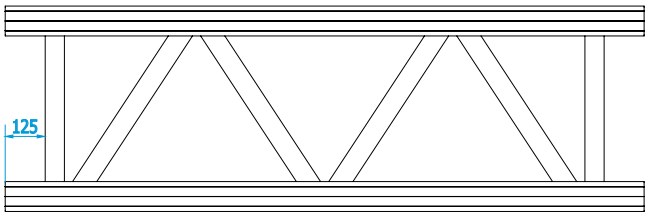

Side View

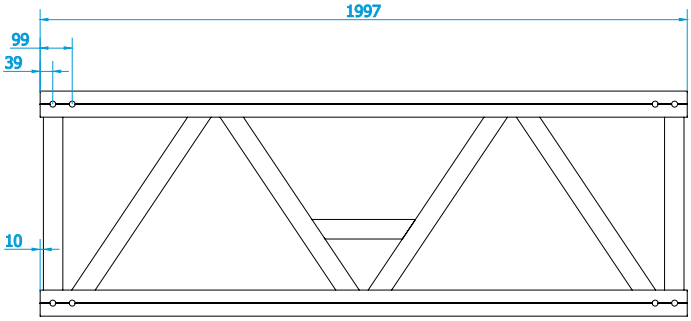

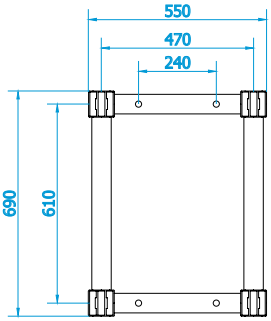

Technical Specifications – BGR70

Type	BGR70
Alloy	EN AW 6082-T6
Truss height	690 mm
Truss width	550 mm
Self-weight	45 kg/m
Main chord	80x80x5 mm
Bracing	60x60x3,5 mm
Coupling system	Lug 70x20 mm + pin 18 mm

BGR70 – standard available lengths and codes

Metres	Feet	Code
0,50	1,64	BGR70-L050
1,00	3,28	BGR70-L100
2,00	6,56	BGR70-L200

Spacer, Pin and Clip – BGR70

Spacer 0mm	BGR-S00
Spacer 1mm	BGR-S01
Spacer 2mm	BGR-S02
Spacer 3mm	BGR-S03
Spacer 4mm	BGR-S04
BGR Locking pin 18mm	BGR70-LP18
SAFETY CLIP 4MM	ACC-LP-04

BGR70 - Allowable Loading

						MAXIMUM ALLOWABLE POINT LOADS										
		Uniformly Distrib-uted Load				Centre Single Load				Single Load Third Points		Single Load Fourth Points		Single Load Fifth Points		
SPAN		UDL		DEFLECTION		CPL		DEFLECTION		TPL		QPL		FPL		SPAN
m	ft	kg/m	lbs/ft	mm	inch	kg	lbs	mm	inch	kg	lbs	kg	lbs	kg	lbs	total weight
10	32,8	1453	978	37	1,5	7267	16038	30	1,2	5450	12028	3633	8019	3028	6682	450
11	36,1	1194	803	45	1,8	6568	14495	36	1,4	4926	10871	3284	7247	2736	6039	495
12	39,4	997	671	54	2,1	5981	13201	44	1,7	4486	9901	2991	6601	2492	5500	540
13	42,6	843	568	63	2,5	5482	12100	51	2,0	4112	9075	2741	6050	2284	5042	585
14	45,9	722	486	73	2,9	5052	11149	60	2,3	3789	8362	2526	5575	2105	4645	630
15	49,2	623	419	84	3,3	4676	10320	69	2,7	3507	7740	2338	5160	1948	4300	675
16	52,5	543	365	96	3,8	4344	9588	78	3,1	3258	7191	2172	4794	1810	3995	720
17	55,8	476	321	109	4,3	4049	8937	89	3,5	3037	6703	2025	4469	1687	3724	765
18	59,0	421	283	122	4,8	3785	8354	100	3,9	2839	6265	1893	4177	1577	3481	810
19	62,3	373	251	136	5,3	3546	7827	112	4,4	2660	5870	1773	3914	1478	3261	855
20	65,6	333	224	151	5,9	3330	7349	124	4,9	2497	5511	1665	3674	1387	3062	900
21	68,9	298	201	166	6,5	3132	6911	137	5,4	2349	5184	1566	3456	1305	2880	945
22	72,2	268	180	183	7,2	2950	6510	151	6,0	2212	4882	1475	3255	1229	2712	990
23	75,4	242	163	200	7,9	2782	6139	166	6,5	2086	4605	1391	3070	1159	2558	1035
24	78,7	219	147	218	8,6	2626	5796	182	7,2	1970	4347	1313	2898	1094	2415	1080
25	82,0	199	134	237	9,3	2481	5477	198	7,8	1861	4107	1241	2738	1034	2282	1125
26	85,3	180	121	257	10,1	2346	5178	216	8,5	1760	3884	1173	2589	978	2158	1170
27	88,6	164	111	277	10,9	2220	4899	234	9,2	1665	3674	1110	2449	925	2041	1215
28	91,8	150	101	299	11,8	2101	4636	253	10,0	1575	3477	1050	2318	875	1932	1260
29	95,1	137	92	321	12,6	1988	4388	273	10,7	1491	3291	994	2194	828	1828	1305
30	98,4	125	84	344	13,5	1882	4154	293	11,6	1412	3116	941	2077	784	1731	1350
31	101,7	115	77	368	14,5	1782	3932	315	12,4	1336	2949	891	1966	742	1638	1395
32	105,0	105	71	393	15,5	1686	3721	338	13,3	1265	2791	843	1861	703	1551	1440
33	108,2	97	65	419	16,5	1595	3521	362	14,2	1196	2640	798	1760	665	1467	1485
34	111,5	89	60	445	17,5	1508	3329	386	15,2	1131	2497	754	1664	628	1387	1530
35	114,8	81	55	473	18,6	1425	3146	412	16,2	1069	2359	713	1573	594	1311	1575
36	118,1	75	50	501	19,7	1346	2970	439	17,3	1009	2228	673	1485	561	1238	1620
37	121,4	69	46	531	20,9	1269	2802	467	18,4	952	2101	635	1401	529	1167	1665
38	124,6	63	42	561	22,1	1196	2640	496	19,5	897	1980	598	1320	498	1100	1710
39	127,9	58	39	592	23,3	1125	2484	526	20,7	844	1863	563	1242	469	1035	1755
40	131,2	53	36	624	24,6	1057	2334	557	21,9	793	1750	529	1167	441	972	1800
41	134,5	48	33	657	25,9	992	2188	589	23,2	744	1641	496	1094	413	912	1845
42	137,8	44	30	692	27,2	928	2048	623	24,5	696	1536	464	1024	387	853	1890
43	141,0	40	27	727	28,6	866	1912	658	25,9	650	1434	433	956	361	797	1935
44	144,3	37	25	763	30,0	807	1780	694	27,3	605	1335	403	890	336	742	1980
45	147,6	33	22	800	31,5	749	1652	732	28,8	561	1239	374	826	312	688	2025

1 inch = 25,4 mm | 1m = 3.28 ft | 1 lbs = 0,453 kg

- Loading figures are only valid for static loads.
- Loading figures are only valid for single spans with supports at both ends.
- All static systems, other than single spans, need an individual structural calculation. Please contact a structural engineer or Prolyte Group for assistance.
- Loading figures are calculated according to and in full compliance with European standards (Eurocode).
- The self-weight of the trusses is already taken into account.
- Loading figures are only valid for the cross sectional orientation of the truss as shown by the icon in the loading table.
- The interaction between bending moment and shear force at the connection point is already taken into account.
- Truss spans can be assembled from different truss lengths.
- Read the manual before assembling, using and loading the truss.

Photo: PROmontaje, Venezuela, Premios Pepsi Music (PPM) Awards

B100RV truss is constructed of main chords (60 x 6 mm) and diagonal members (48 x 3 mm), and uses the CCS7 coupling system. Prolyte supplies a variety of B100RV truss elements that provide maximum flexibility, including standard or custom-made lengths, circles and arches and corners. Prolyte can create custom-made pieces on request. Due to the 4-sided webbing of the B100RV truss, it can absorb vertical as well as horizontal loads, which makes it ideal for outdoor use or 3-dimensional structures. The B100RV truss is equipped with a set of castors as standard. These castors are positioned on the inside of the main chords to allow for easy stacking of the truss for transportation purposes. Thanks to the clever spigot pin orientation in the couplers, assembly of the truss is foolproof.

B100RV

Top View

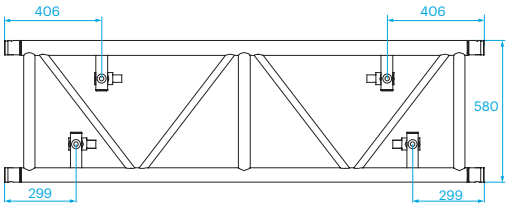

Side View

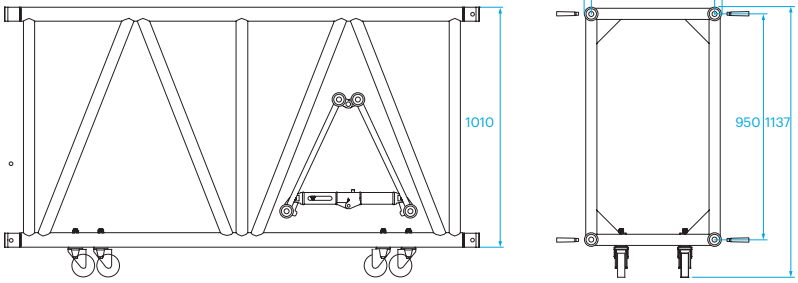

Photo: Kühl Beschallung, Dubai

Technical Specifications - B100RV Series	
Types	Rectangular (R)
Alloy	EN AW 6082 T6
Main Chords	60 x 6 mm
Diagonal Members	48 x 3 mm
Coupling System	CCS7

Structural data can be found at www.prolyte.com

B100RV Series - Standard available Lengths and Codes		
Metres	Feet	Code
0,74	2.43	B100RV-L074
0,80	2.62	B100RV-L080
1,00	3.28	B100RV-L100
1,20	3.94	B100RV-L120
1,60	5.25	B100RV-L160
2,00	6.56	B100RV-L200
2,40	7.87	B100RV-L240
2,50	8.20	B100RV-L250
3,00	9.84	B100RV-L300
3,20	10.50	B100RV-L320
4,00	13.12	B100RV-L400

Other Lengths on request

B100RV - Allowable Loading

SPAN		Uniformly Distributed Load		DEFLECTION		Centre Point Load		DEFLECTION		Single Load Third Points Load per Point		Single Load Fourth Points Load per Point		Single Load Fifth Points Load per Point		SPAN
		UDL				CPL				TPL		QPL		FPL		
						MAXIMUM ALLOWABLE POINT LOADS										
m	ft	kg/m	lbs/ft	mm	inch	kgs	lbs	mm	inch	kgs	lbs	kgs	lbs	kgs	lbs	total weight
6	19,7	1974,8	1328,8	9	0,3	5715,2	12613,4	7	0,3	3507,0	7739,9	2695,8	5949,7	2209,9	4877,2	132
7	23,0	1689,4	1136,8	12	0,5	5236,7	11557,5	10	0,4	3234,8	7139,3	2525,4	5573,5	2078,3	4586,7	154
8	26,2	1475,4	992,8	16	0,6	4828,7	10657,0	13	0,5	3023,2	6672,2	2388,2	5270,7	1977,4	4364,2	176
9	29,5	1245,1	837,8	20	0,8	4476,3	9879,2	16	0,6	2835,7	6258,4	2263,5	4995,6	1888,0	4166,9	198
10	32,8	1004,3	675,7	24	1,0	4168,4	9199,7	20	0,8	2668,3	5888,8	2149,6	4744,3	1805,2	3984,0	220
11	36,1	826,1	555,8	30	1,2	3896,8	8600,2	24	0,9	2517,7	5556,5	2045,1	4513,4	1709,3	3772,4	242
12	39,4	690,5	464,6	35	1,4	3655,1	8066,8	28	1,1	2381,4	5255,7	1948,6	4300,5	1597,4	3525,5	264
13	42,6	585,1	393,7	41	1,6	3438,4	7588,6	33	1,3	2257,3	4981,8	1859,2	4103,2	1497,8	3305,7	286
14	45,9	501,4	337,3	48	1,9	3242,8	7157,0	38	1,5	2143,7	4731,2	1754,8	3872,7	1408,5	3108,5	308
15	49,2	433,8	291,9	55	2,2	3065,2	6764,9	44	1,7	2039,3	4500,7	1626,9	3590,5	1327,8	2930,5	330
16	52,5	378,6	254,7	63	2,5	2902,9	6406,8	50	2,0	1942,9	4287,9	1514,3	3342,1	1254,5	2768,6	352
17	55,8	332,8	223,9	71	2,8	2754,0	6078,0	56	2,2	1853,4	4090,5	1414,3	3121,4	1178,6	2601,2	374
18	59,0	294,4	198,1	79	3,1	2616,6	5774,8	63	2,5	1770,2	3906,7	1324,8	2923,8	1104,0	2436,5	396
19	62,3	261,9	176,2	88	3,5	2488,3	5491,6	71	2,8	1692,4	3735,1	1244,1	2745,8	1036,8	2288,2	418
20	65,6	234,2	157,6	98	3,8	2341,9	5168,6	78	3,1	1619,5	3574,2	1171,0	2584,3	975,8	2153,6	440
21	68,9	210,3	141,5	108	4,2	2208,4	4874,0	86	3,4	1551,0	3423,0	1104,2	2437,0	920,2	2030,8	462
22	72,2	189,6	127,6	118	4,7	2086,0	4603,9	95	3,7	1486,4	3280,4	1043,0	2302,0	869,2	1918,3	484
23	75,4	171,6	115,5	129	5,1	1973,3	4355,2	103	4,1	1425,3	3145,7	986,7	2177,6	822,2	1814,6	506
24	78,7	155,8	104,8	141	5,5	1869,1	4125,1	113	4,4	1367,4	3017,9	934,5	2062,5	778,8	1718,8	528
25	82,0	141,8	95,4	153	6,0	1772,3	3911,4	122	4,8	1312,5	2896,6	886,1	1955,7	738,4	1629,7	550
26	85,3	129,4	87,1	165	6,5	1682,0	3712,3	132	5,2	1260,1	2781,1	841,0	1856,1	700,8	1546,8	572
27	88,6	118,3	79,6	178	7,0	1597,7	3526,0	142	5,6	1198,2	2644,5	798,8	1763,0	665,7	1469,2	594
28	91,8	108,5	73,0	191	7,5	1518,5	3351,3	153	6,0	1138,9	2513,5	759,3	1675,7	632,7	1396,4	616
29	95,1	99,6	67,0	205	8,1	1444,0	3187,0	164	6,5	1083,0	2390,2	722,0	1593,5	601,7	1327,9	638
30	98,4	91,6	61,6	220	8,7	1373,8	3031,9	176	6,9	1030,3	2273,9	686,9	1516,0	572,4	1263,3	660
31	101,7	84,3	56,8	235	9,2	1307,3	2885,2	188	7,4	980,5	2163,9	653,7	1442,6	544,7	1202,2	682
32	105,0	77,8	52,3	250	9,8	1244,3	2746,2	200	7,9	933,2	2059,6	622,2	1373,1	518,5	1144,2	704
33	108,2	71,8	48,3	266	10,5	1184,4	2614,1	213	8,4	888,3	1960,6	592,2	1307,0	493,5	1089,2	726
34	111,5	66,3	44,6	282	11,1	1127,4	2488,3	226	8,9	845,6	1866,2	563,7	1244,1	469,8	1036,8	748
35	114,8	61,3	41,3	299	11,8	1073,1	2368,2	239	9,4	804,8	1776,2	536,5	1184,1	447,1	986,8	770
36	118,1	56,7	38,2	316	12,5	1021,1	2253,5	253	10,0	765,8	1690,1	510,5	1126,7	425,4	938,9	792
37	121,4	52,5	35,3	334	13,2	971,3	2143,6	268	10,5	728,4	1607,7	485,6	1071,8	404,7	893,2	814
38	124,6	48,6	32,7	353	13,9	923,5	2038,2	282	11,1	692,6	1528,6	461,8	1019,1	384,8	849,2	836
39	127,9	45,0	30,3	371	14,6	877,6	1936,9	297	11,7	658,2	1452,7	438,8	968,4	365,7	807,0	858
40	131,2	41,7	28,0	391	15,4	833,5	1839,4	313	12,3	625,1	1379,6	416,7	919,7	347,3	766,4	880

1 inch = 25,4 mm | 1m = 3.28 ft | 1 lbs = 0,453 kg

- Tüv certification only valid for loading table above.
- Loading figures are only valid for static loads.
- Loading figures are only valid for single spans with supports at both ends.
- All static systems, other than single spans, need an individual structural calculation. Please contact a structural engineer or Prolyte for assistance.
- Loading figures are calculated according to and in full compliance with European standards (Eurocode).
- The self-weight of the trusses is already taken into account.
- Loading figures are only valid for the cross sectional orientation of the truss as shown by the icon in the loading table.
- The interaction between bending moment and shear force at the connection point is already taken into account.
- Truss spans can be assembled from different truss lengths.
- Read the manual before assembling, using and loading the truss.

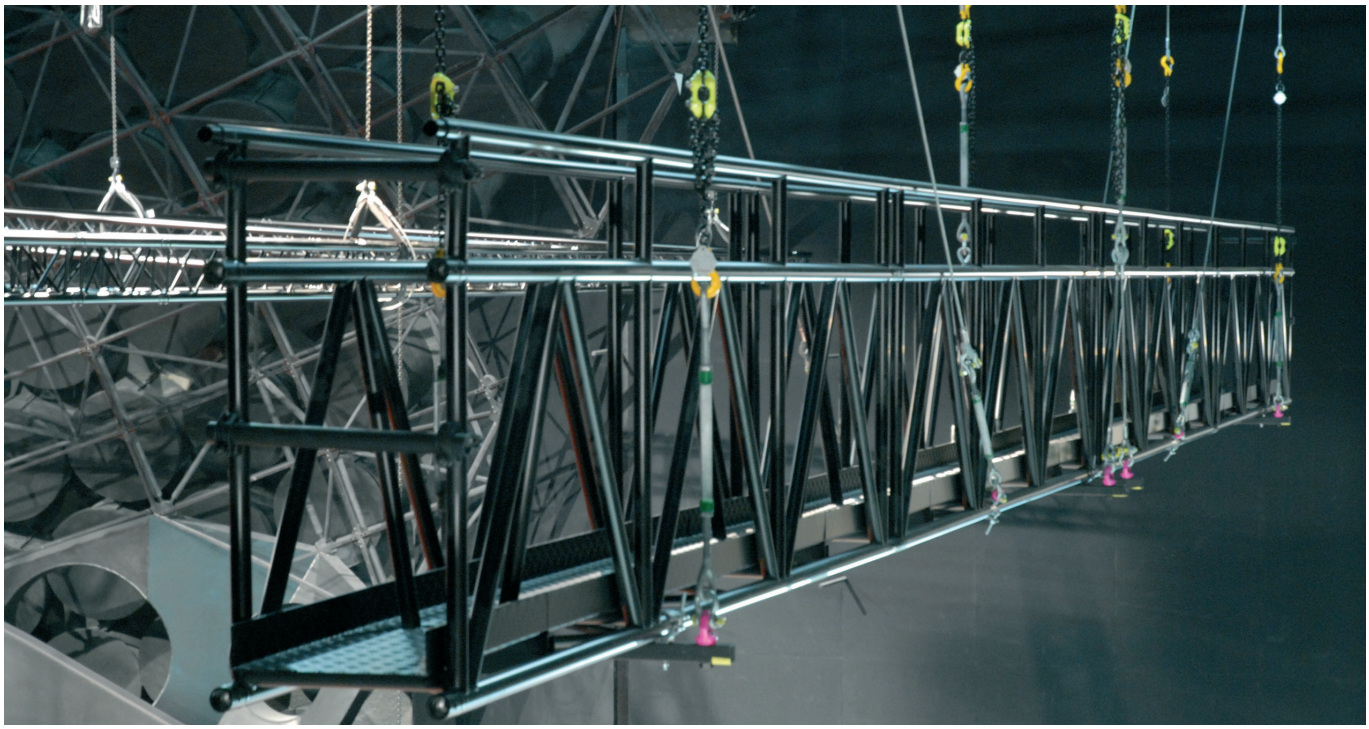

Photo: Jan Hoefnagels, Flashlight Rental BV, The Netherlands. Project: Blue Man Group.

The design of the Prolyte Catwalk Truss (B100RV-CW) is based on the B100RV. It can be used to create mother grids or working platforms, and in a theatrical environment it can be used for prosceniums or lighting bridges. The B100RV-CW truss is fitted with an extra handrail on the top side and a reinforced plate on the bottom side to create a walking platform. The Catwalk Truss can be flown by assembling bracing bars with fixed lifting eyes to the bottom braces of the truss.
The Catwalk truss is standard non-powder coated.

B100CW

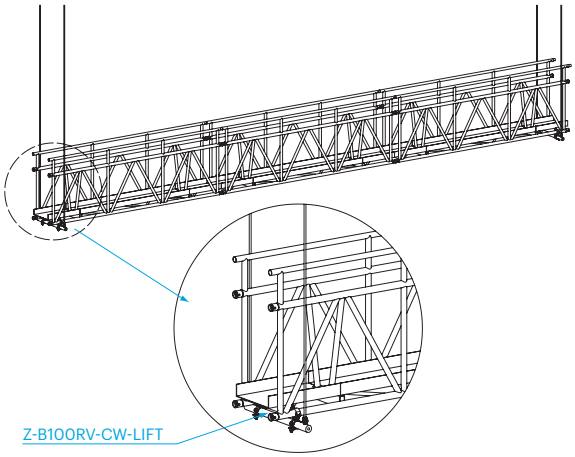

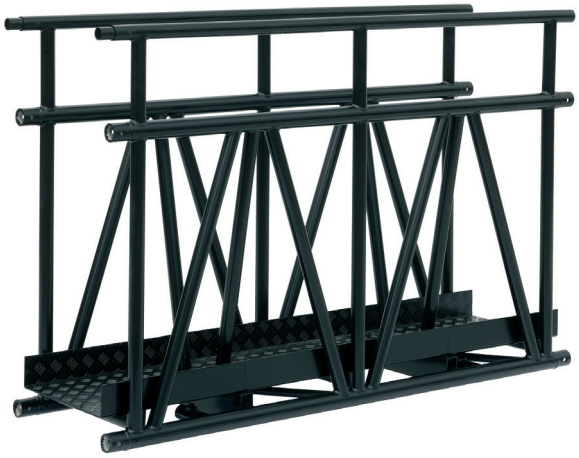

B100CW-C003

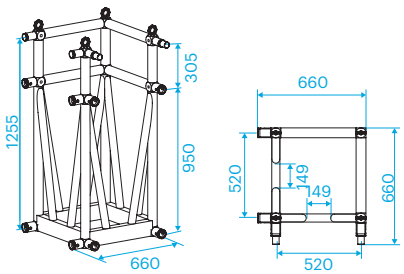

B100CW-C016

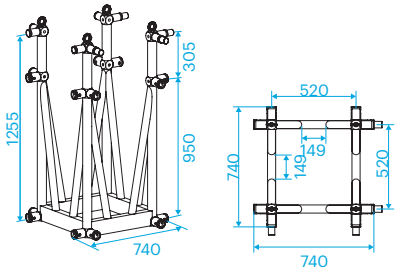

B100CW-C017

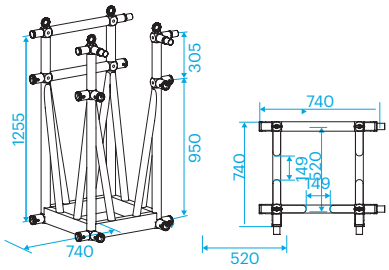

B100CW - Allowable Loading

SPAN		Uniformly Distributed Load UDL		DEFLECTION		Centre Point Load CPL		DEFLECTION		Single Load Third Points Load per Point TPL		Single Load Fourth Points Load per Point QPL		Single Load Fifth Points Load per Point FPL		SPAN
						MAXIMUM ALLOWABLE POINT LOADS										
m	ft	kg/m	lbs/ft	mm	inch	kgs	lbs	mm	inch	kgs	lbs	kgs	lbs	kgs	lbs	total weight
4	13,1	1475,0	992,5	1	0,04	3188,7	7037,4	1	0,04	2391,5	5278,0	1594,3	3518,7	1328,6	2932,2	120,0
5	16,4	1010,7	680,0	2	0,08	2526,6	5576,3	1	0,04	1895,0	4182,2	1263,3	2788,1	1052,8	2323,4	150,0
6	19,7	693,6	466,7	2	0,08	2080,8	4592,3	2	0,08	1560,6	3444,2	1040,4	2296,1	867,0	1913,4	180,0
7	23,0	502,4	338,1	3	0,12	1758,5	3880,9	2	0,08	1318,8	2910,7	879,2	1940,5	732,7	1617,0	210,0
8	26,2	378,3	254,6	4	0,16	1513,3	3339,9	3	0,12	1135,0	2504,9	756,7	1670,0	630,6	1391,6	240,0
9	29,5	293,3	197,3	5	0,20	1319,7	2912,5	4	0,16	989,8	2184,4	659,8	1456,3	549,9	1213,6	270,0
10	32,8	232,4	156,4	6	0,24	1162,1	2564,7	5	0,20	871,6	1923,5	581,0	1282,3	484,2	1068,6	300,0
11	36,1	187,4	126,1	7	0,28	1030,7	2274,6	6	0,24	773,0	1706,0	515,3	1137,3	429,4	947,8	330,0
12	39,4	153,1	103,0	9	0,35	918,9	2028,0	7	0,28	689,2	1521,0	459,4	1014,0	382,9	845,0	360,0
13	42,6	126,5	85,1	10	0,39	822,2	1814,7	8	0,31	616,7	1361,0	411,1	907,3	342,6	756,1	390,0
14	45,9	105,4	70,9	12	0,47	737,5	1627,6	10	0,39	553,1	1220,7	368,7	813,8	307,3	678,2	420,0
15	49,2	88,3	59,4	14	0,55	662,2	1461,5	11	0,43	496,7	1096,1	331,1	730,7	275,9	609,0	450,0
16	52,5	74,3	50,0	16	0,63	594,7	1312,4	13	0,51	446,0	984,3	297,3	656,2	247,8	546,8	480,0
17	55,8	62,8	42,2	18	0,71	533,5	1177,4	14	0,55	400,1	883,0	266,7	588,7	222,3	490,6	510,0
18	59,0	53,1	35,7	20	0,79	477,6	1054,0	16	0,63	358,2	790,5	238,8	527,0	199,0	439,2	540,0
19	62,3	44,9	30,2	22	0,87	426,2	940,5	18	0,71	319,6	705,4	213,1	470,3	177,6	391,9	570,0
20	65,6	37,9	25,5	25	0,98	378,5	835,4	20	0,79	283,9	626,6	189,3	417,7	157,7	348,1	600,0

1 inch = 25,4 mm | 1m = 3.28 ft | 1 lbs = 0,453 kg

- Tüv certification only valid for loading table above.
- Loading figures are only valid for static loads.
- Loading figures are only valid for single spans with supports at both ends.
- All static systems, other than single spans, need an individual structural calculation. Please contact a structural engineer or Prolyte for assistance.
- Loading figures are calculated according to and in full compliance with European standards (Eurocode).
- The self-weight of the trusses is already taken into account.
- Loading figures are only valid for the cross sectional orientation of the truss as shown by the icon in the loading table.
- The interaction between bending moment and shear force at the connection point is already taken into account.
- Truss spans can be assembled from different truss lengths.
- Read the manual before assembling, using and loading the truss.

M145RV - MAMMOTH TRUSS

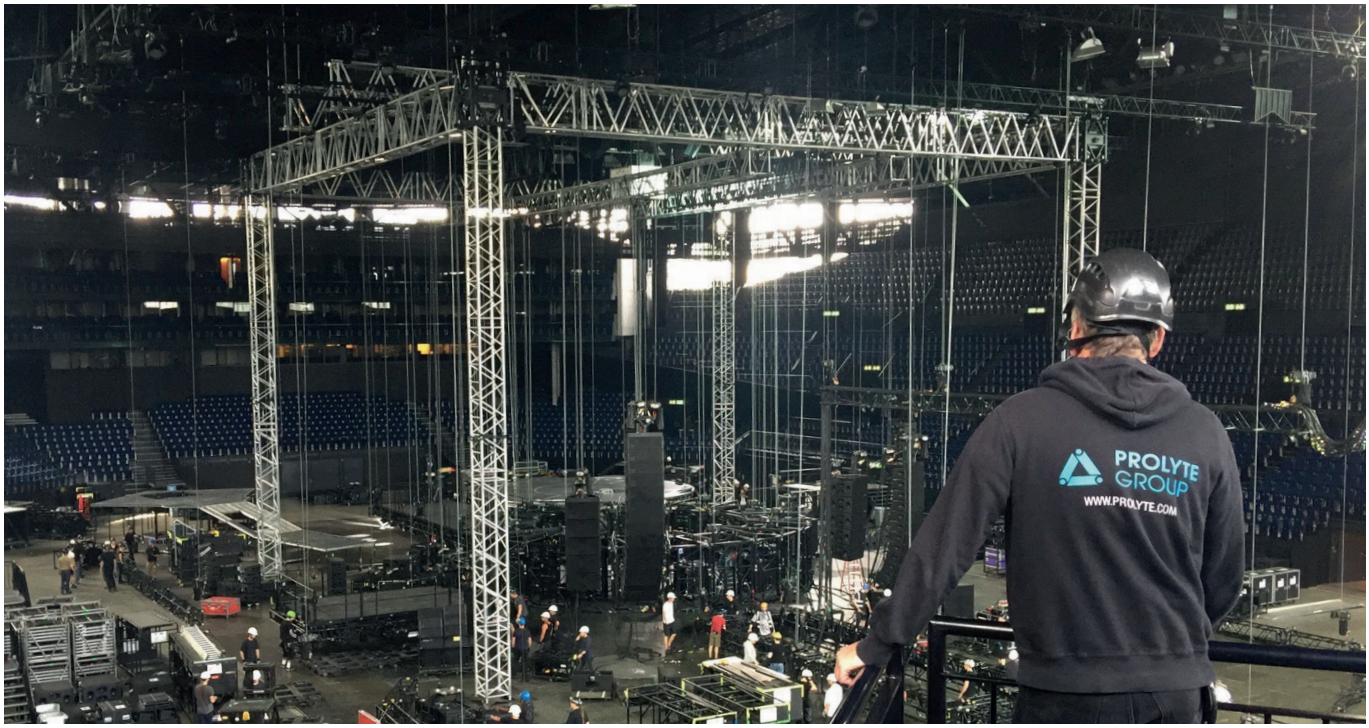

Photo: Malecon, Germany

BIG, BIGGER, BIGGEST?

The Prolyte M145RV Mammoth Truss is one of the largest trusses ever constructed from aluminium. The design of this truss not only reflects the Prolyte philosophy of making user-friendly products, it also underscores the unrivalled technological knowledge and experience Prolyte has gained over the years.

EXPERIENCE TRANSLATED INTO DESIGN

Mammoth Truss provides massive strength for a range of application possibilities within a large construction, such as a roof system or mother grid. With its superior loading capacity the M145RV Mammoth Truss is five times stronger than the B100 Series truss. For example, on a stretch of 30 metres you still can apply a point load of 6400kg. Other truss types can be stored inside the M145RV trusses. The overall measurements are thus designed that container and truck space are efficiently used.

M145RV

Top View

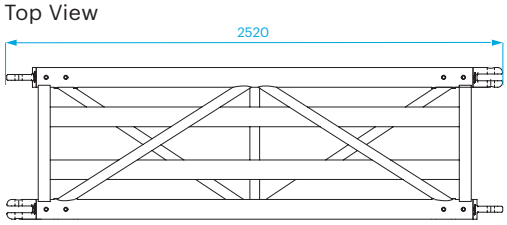

Side View

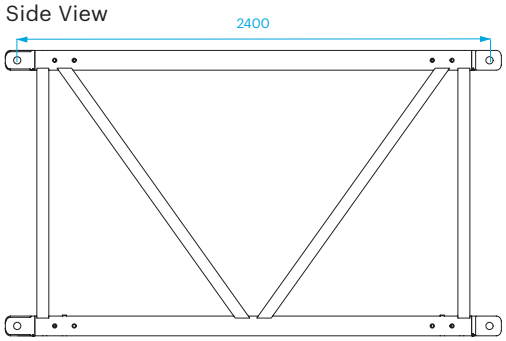

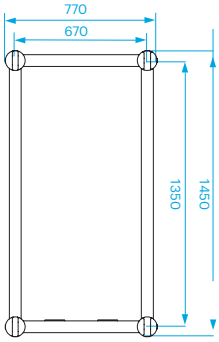

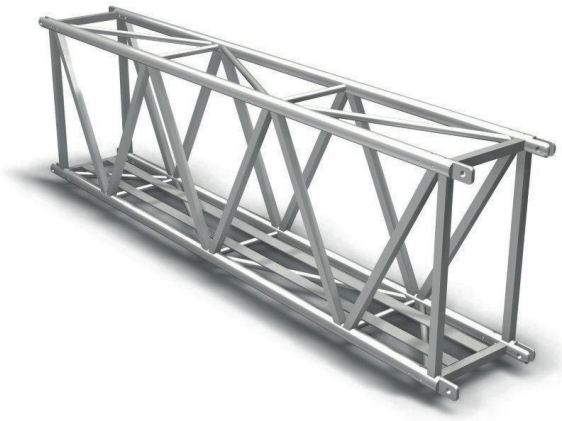

M145RV - Allowable Loading

						MAXIMUM ALLOWABLE POINT LOADS										
		Uniformly Distributed Load				Centre Point Load				Single Load Third Points Load per Point		Single Load Fourth Points Load per Point		Single Load Fifth Points Load per Point		
SPAN		UDL		DEFLECTION		CPL		DEFLECTION		TPL		QPL		FPL		SPAN
m	ft	kg/m	lbs/ft	mm	inch	kgs	lbs	mm	inch	kgs	lbs	kgs	lbs	kgs	lbs	total weight
24.0	78.7	700.0	471.0	122	4.97	8400.0	18538.8	97	3.99	6300.0	13904.1	4200.0	9269.4	3486.0	7693.6	1200
26.4	86.6	569.8	383.4	147	6.01	7521.8	16600.7	118	4.83	5641.4	12450.5	3760.9	8300.3	3121.6	6889.3	1320
28.8	94.5	470.8	316.8	175	7.16	6780.0	14963.5	140	5.75	5085.0	11222.6	3390.0	7481.7	2813.7	6209.8	1440
31.2	102.3	393.8	265.0	206	8.40	6143.1	13557.8	165	6.75	4607.3	10168.3	3071.5	6778.9	2549.4	5626.5	1560
33.6	110.2	332.7	223.8	239	9.74	5588.6	12334.0	191	7.83	4191.4	9250.5	2794.3	6167.0	2319.3	5118.6	1680
36.0	118.1	283.3	190.6	274	11.18	5100.0	11255.7	219	8.99	3825.0	8441.8	2550.0	5627.9	2116.5	4671.1	1800
38.4	126.0	243.0	163.5	312	12.72	4665.0	10295.7	249	10.22	3498.8	7721.7	2332.5	5147.8	1936.0	4272.7	1920
40.8	133.8	209.5	141.0	352	14.36	4274.1	9433.0	282	11.54	3205.6	7074.7	2137.1	4716.5	1773.8	3914.7	2040
43.2	141.7	181.5	122.1	394	16.10	3920.0	8651.4	316	12.94	2940.0	6488.6	1960.0	4325.7	1626.8	3590.3	2160
45.6	149.6	157.8	106.1	440	17.94	3596.8	7938.2	352	14.42	2697.6	5953.7	1798.4	3969.1	1492.7	3294.4	2280
48.0	157.4	137.5	92.5	487	19.88	3300.0	7283.1	390	15.98	2475.0	5462.3	1650.0	3641.6	1369.5	3022.5	2400
50.4	165.3	120.1	80.8	537	21.91	3025.7	6677.8	430	17.61	2269.3	5008.3	1512.9	3338.9	1255.7	2771.3	2520
52.8	173.2	105.0	70.6	589	24.05	2770.9	6115.4	472	19.33	2078.2	4586.5	1385.5	3057.7	1149.9	2537.9	2640
55.2	181.1	91.8	61.8	644	26.29	2533.0	5590.4	516	21.13	1899.8	4192.8	1266.5	2795.2	1051.2	2320.0	2760
57.6	188.9	80.2	54.0	701	28.62	2310.0	5098.2	561	23.00	1732.5	3823.6	1155.0	2549.1	958.7	2115.7	2880
60.0	196.8	70.0	47.1	761	31.06	2100.0	4634.7	609	24.96	1575.0	3476.0	1050.0	2317.4	871.5	1923.4	3000

1 inch = 25,4 mm | 1m = 3.28 ft | 1 lbs = 0,453 kg

- Tüv certification only valid for loading table above.
- Loading figures are only valid for static loads.
- Loading figures are only valid for single spans with supports at both ends.
- All static systems, other than single spans, need an individual structural calculation. Please contact a structural engineer or Prolyte for assistance.
- Loading figures are calculated according to and in full compliance with European standards (Eurocode).
- The self-weight of the trusses is already taken into account.
- Loading figures are only valid for the cross sectional orientation of the truss as shown by the icon in the loading table.
- The interaction between bending moment and shear force at the connection point is already taken into account.
- Truss spans can be assembled from different truss lengths.
- Read the manual before assembling, using and loading the truss.

Technical Specifications - M145RV

Types	Rectangular (RV)
Alloy	EN AW 6082 T6
Main Chords	100 x 8 mm
Diagonal Members	60 x 60 x 3,5 / 50 x 4 mm
Coupling System	Pin / Fork connection

Structural data can be found at www.prolyte.com

M145RV - Standard available Lengths and Codes

Metres	Feet	Code
2,40	7.87	M145RV-L240
3,00	9.84	M145RV-L300
4,80	15,75	M145RV-L480
6,00	19.69	M145RV-L600

Other Lengths on request

CIRCULAR TRUSS

Photo: AED Rent, Belgium.

In addition to straight lengths, Prolyte manufactures circular trusses, curved trusses and arcs. These trusses are manufactured with a high degree of accuracy, ensuring a perfect fit without distortion. Semi-automated welding jigs are used for production to ensure that all parts are identical. This guarantees that every segment of a circle can be mounted at any position or be replaced by a new part without affecting the integrity or overall shape of the circle.

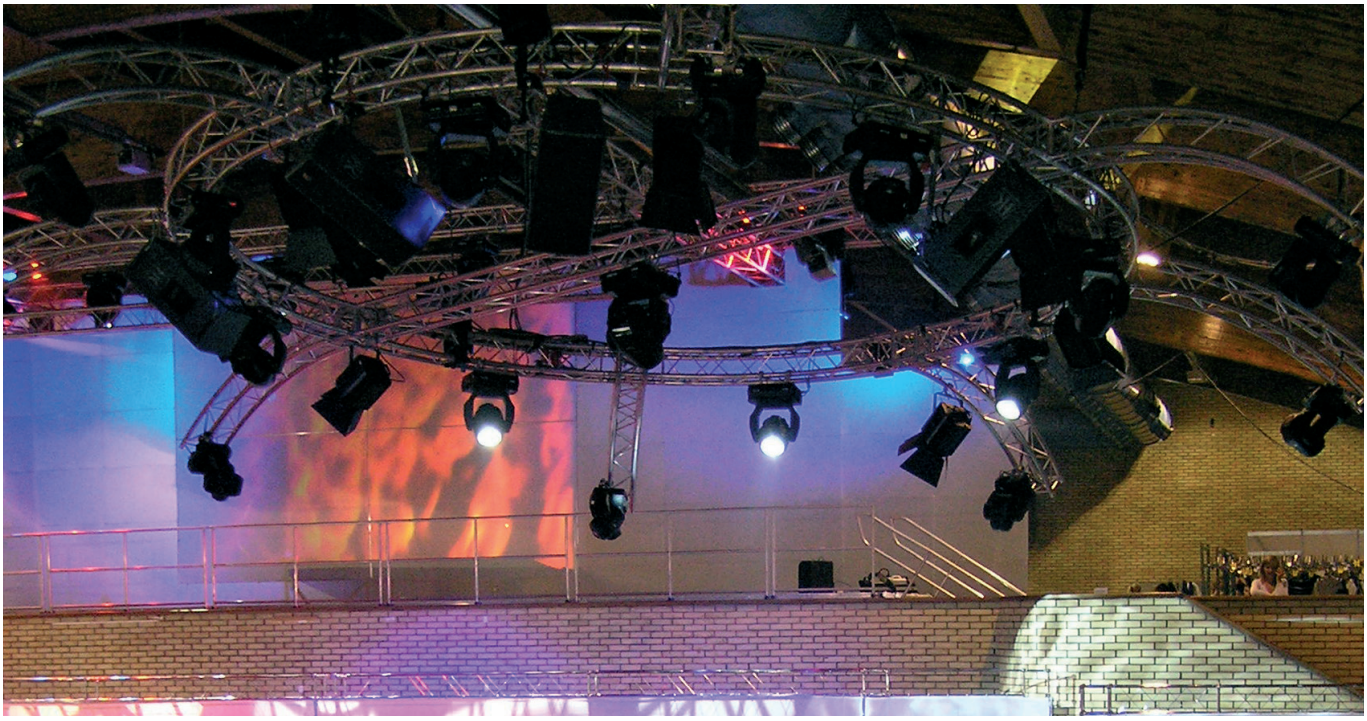

Photo: PRO 1, Project: Wella fasion show.

Circular or curved trusses are manufactured in different diameters or degrees. When ordering a complete circular truss, the number of cuttings required (each segment requires one cut) must be indicated. Couplers do not have to be ordered separately, as they are included in the amount of cuttings ordered. A "cutting" divides the circle into segments. Individual segments cannot be longer than 5 meters. Prolyte recommends segment lengths of between 3/4 meters, and an even number of segments. For further details in this regard, please refer to the Prolyte BlackBook.

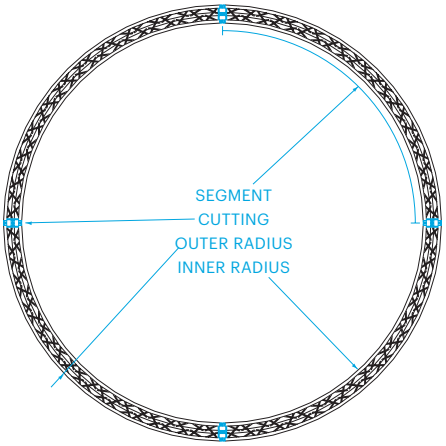

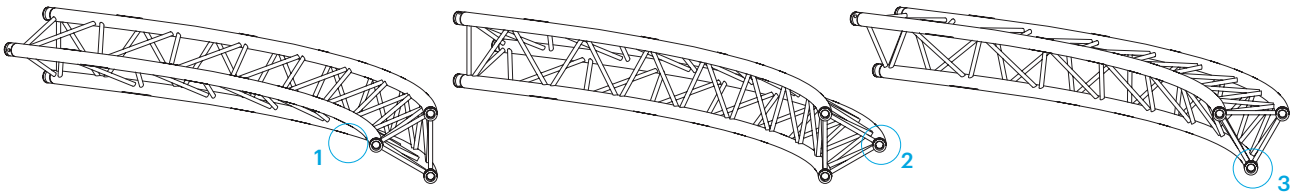

1 - APEX IN

2 - APEX OUT

3 - APEX DOWN/UP

X30D Circular truss - Allowable Loading

Diameter		3 Suspension Points				4 Suspension Points				6 Suspension Points				8 Suspension Points				10 Suspension Points			
		UDL		CPL		UDL		CPL		UDL		CPL		UDL		CPL		UDL		CPL	
m	ft	kg/m	lbs/ft	kg	lbs	kg/m	lbs/ft	kg	lbs	kg/m	lbs/ft	kg	lbs	kg/m	lbs/ft	kg	lbs	kg/m	lbs/ft	kg	lbs
4	13.1	115	77,7	318	701,8	205	138,0	457	1008,4	410	275,9	686	1515,4	622	418,3	840	1854,4	830	558,7	939	2072,0
6	19.7	58	39,3	232	512,1	110	74,3	349	769,4	239	161,1	533	1177,2	380	255,6	714	1575,7	521	350,5	848	1872,9
8	26.2	34	22,8	182	402,6	62	41,7	260	573,1	142	95,7	397	876,9	255	171,4	533	1177,2	369	248,2	669	1476,2
10	32.8	21	14,0	146	321,8	39	26,1	203	449,1	90	60,7	315	695,3	162	109,1	425	937,1	255	171,4	533	1177,2
12	39.4	14	9,3	116	255,5	26	17,7	165	364,8	62	41,7	260	573,1	112	75,3	352	776,2	176	118,5	443	977,2
14	45.9	10	6,4	93	206,2	19	12,6	137	303,1	45	30,2	220	484,8	82	54,9	299	660,5	129	86,7	378	833,8

H30D Circular truss - Allowable Loading

Diameter		3 Suspension Points				4 Suspension Points				6 Suspension Points				8 Suspension Points				10 Suspension Points			
		UDL		CPL		UDL		CPL		UDL		CPL		UDL		CPL		UDL		CPL	
m	ft	kg/m	lbs/ft	kg	lbs	kg/m	lbs/ft	kg	lbs	kg/m	lbs/ft	kg	lbs	kg/m	lbs/ft	kg	lbs	kg/m	lbs/ft	kg	lbs
4	13.1	115	77,1	317	699,8	204	137,3	456	1006,3	409	275,3	686	1513,3	621	417,7	839	1852,5	829	558,1	938	2070,3
6	19.7	58	38,7	231	510,0	109	73,7	347	767,0	238	160,5	565	1246,8	379	254,9	731	1612,9	520	349,9	847	1870,6
8	26.2	34	22,9	181	400,3	68	45,9	280	618,8	159	106,7	480	1059,3	262	176,2	647	1427,6	368	247,6	773	1705,6
10	32.8	22	14,7	149	328,9	46	31,1	235	518,0	114	76,4	417	920,3	194	130,5	580	1280,0	278	187,4	710	1567,0
12	39.4	15	10,0	126	278,7	33	22,3	202	444,9	85	57,4	357	789,0	150	101,2	484	1069,0	220	148,1	610	1346,1
14	45.9	10	7,1	109	241,5	25	16,6	176	389,6	62	41,6	302	667,3	112	75,6	412	909,5	177	119,4	520	1148,4

X30V Circular truss - Allowable Loading

Diameter		3 Suspension Points				4 Suspension Points				6 Suspension Points				8 Suspension Points				10 Suspension Points			
		UDL		CPL		UDL		CPL		UDL		CPL		UDL		CPL		UDL		CPL	
m	ft	kg/m	lbs/ft	kg	lbs	kg/m	lbs/ft	kg	lbs	kg/m	lbs/ft	kg	lbs	kg/m	lbs/ft	kg	lbs	kg/m	lbs/ft	kg	lbs
4	13.1	189	127,0	576	1272,4	306	205,9	759	1676,0	548	369,1	1003	2213,1	787	529,5	1135	2505,1	1020	686,4	1210	2670,7
6	19.7	103	69,1	445	982,4	176	118,7	619	1366,2	337	227,0	882	1947,0	499	335,8	1043	2302,5	657	442,4	1141	2518,4
8	26.2	64	43,4	362	798,5	116	78,2	522	1151,7	235	157,8	787	1737,1	357	240,0	965	2129,6	477	321,1	1079	2382,1
10	32.8	44	29,6	304	671,4	82	55,5	450	994,2	175	117,5	710	1567,2	272	183,3	897	1980,3	370	248,8	1024	2259,5
12	39.4	32	21,2	262	578,3	62	41,4	392	865,6	136	91,5	606	1338,8	217	146,1	817	1804,0	299	200,9	973	2148,5
14	45.9	23	15,8	230	507,2	45	30,2	329	726,9	105	71,0	515	1137,5	178	119,9	697	1538,7	248	167,0	877	1936,2

H30V Circular truss - Allowable Loading

Diameter		3 Suspension Points				4 Suspension Points				6 Suspension Points				8 Suspension Points				10 Suspension Points			
		UDL		CPL		UDL		CPL		UDL		CPL		UDL		CPL		UDL		CPL	
m	ft	kg/m	lbs/ft	kg	lbs	kg/m	lbs/ft	kg	lbs	kg/m	lbs/ft	kg	lbs	kg/m	lbs/ft	kg	lbs	kg/m	lbs/ft	kg	lbs
4	13.1	188	126,3	575	1268,3	305	205,2	757	1671,9	547	368,4	1001	2209,5	786	528,8	1133	2502,1	1019	685,7	1209	2668,1
6	19.7	102	68,4	443	977,6	175	118,0	617	1361,3	336	226,3	880	1942,3	498	335,1	1041	2298,3	656	441,7	1139	2514,8
8	26.2	63	42,7	359	793,3	115	77,5	519	1146,1	233	157,1	784	1731,5	356	239,3	962	2124,4	476	320,4	1077	2377,5
10	32.8	43	28,8	302	665,9	81	54,8	448	988,2	174	116,8	707	1560,9	271	182,6	894	1974,3	369	248,0	1021	2254,0
12	39.4	30	20,5	259	572,6	60	40,7	393	867,4	135	90,8	643	1419,9	216	145,4	835	1843,3	297	200,2	970	2142,3
14	45.9	22	15,1	227	501,3	46	31,3	350	772,0	108	72,8	590	1301,6	177	119,2	783	1728,0	247	166,3	924	2040,7

All loading figures are based on Uniformly Divided Suspension Points and a suspended load in each of the fields. In all other cases, this loading data is NOT valid.
If loads are unevenly divided, instability will occur. For more details and loading figures of other diameters, please contact our engineering department.

- The absence of diagonal members at the top and/or bottom side of the truss means a dramatic reduction in the allowable loading; a structural report per situation is required for these models.
- Loading figures are based on Eurocode; to comply with BS 7905-2 / ANSI E1.2-2006 / CWA 15902-2, the loading data must be multiplied by 0.85.
- Truss orientation apex-up/down. Truss 100% horizontal.

H40D Circular truss - Allowable Loading

Diameter		3 Suspension Points				4 Suspension Points				6 Suspension Points				8 Suspension Points				10 Suspension Points			
		UDL		CPL		UDL		CPL		UDL		CPL		UDL		CPL		UDL		CPL	
m	ft	kg/m	lbs/ft	kg	lbs	kg/m	lbs/ft	kg	lbs	kg/m	lbs/ft	kg	lbs	kg/m	lbs/ft	kg	lbs	kg/m	lbs/ft	kg	lbs
4	13.1	179	120,8	521	1149,1	304	204,6	717	1582,1	573	385,8	1007	2223,4	842	567,0	1181	2607,6	1106	744,4	1286	2838,1
6	19.7	94	63,3	390	861,4	170	114,2	565	1247,4	344	231,7	859	1897,0	526	353,7	1060	2339,4	705	474,3	1190	2627,1
8	26.2	58	38,7	312	687,7	109	73,3	466	1028,4	235	157,9	749	1653,3	370	249,2	961	2120,7	506	340,5	1108	2444,9
10	32.8	38	25,8	259	571,5	76	51,0	396	874,0	172	115,6	619	1367,4	279	187,8	833	1838,9	388	261,2	1036	2286,0
12	39.4	27	18,2	221	488,3	52	35,2	329	726,1	122	82,2	512	1129,6	220	147,8	691	1525,0	311	209,0	868	1917,2
14	45.9	20	13,2	191	422,5	38	25,3	275	607,3	89	59,8	434	958,2	161	108,1	589	1299,6	253	170,2	742	1637,3

H40V Circular truss - Allowable Loading

Diameter		3 Suspension Points				4 Suspension Points				6 Suspension Points				8 Suspension Points				10 Suspension Points			
		UDL		CPL		UDL		CPL		UDL		CPL		UDL		CPL		UDL		CPL	
m	ft	kg/m	lbs/ft	kg	lbs	kg/m	lbs/ft	kg	lbs	kg/m	lbs/ft	kg	lbs	kg/m	lbs/ft	kg	lbs	kg/m	lbs/ft	kg	lbs
4	13.1	277	187,2	892	1969,1	430	289,6	1122	2476,1	739	497,6	1398	3085,7	1041	700,4	1535	3389,5	1336	899,1	1610	3554,2
6	19.7	156	105,4	712	1571,7	256	172,1	946	2089,4	464	312,0	1264	2791,3	668	449,8	1440	3179,5	869	584,6	1541	3402,0
8	26.2	101	68,2	591	1304,6	173	116,1	818	1805,0	328	220,7	1154	2546,9	483	325,3	1356	2993,2	636	427,8	1478	3261,8
10	32.8	70	47,3	505	1114,8	125	84,2	719	1587,0	248	166,9	1060	2340,7	373	251,2	1281	2826,9	496	334,1	1419	3132,2
12	39.4	51	34,5	440	971,3	95	63,9	641	1414,7	196	131,8	981	2164,5	301	202,2	1213	2677,5	404	271,9	1365	3012,2
14	45.9	39	26,4	389	858,7	75	50,2	578	1275,0	159	107,2	911	2012,1	249	167,6	1152	2542,5	338	227,6	1314	2900,6

S36V Circular truss - Allowable Loading

Diameter		3 Suspension Points				4 Suspension Points				6 Suspension Points				8 Suspension Points				10 Suspension Points			
		UDL		CPL		UDL		CPL		UDL		CPL		UDL		CPL		UDL		CPL	
m	ft	kg/m	lbs/ft	kg	lbs	kg/m	lbs/ft	kg	lbs	kg/m	lbs/ft	kg	lbs	kg/m	lbs/ft	kg	lbs	kg/m	lbs/ft	kg	lbs
4	13.1	485	326,7	1535	3388,7	766	515,6	1963	4333,2	1335	898,3	2495	5508,5	1891	1272,4	2769	6111,7	2435	1638,5	2919	6443,6
6	19.7	270	182,0	1211	2673,4	451	303,3	1636	3612,3	832	559,8	2236	4936,2	1209	813,8	2580	5694,5	1579	1062,4	2780	6137,6
8	26.2	173	116,4	998	2203,1	302	202,9	1401	3093,3	585	393,7	2025	4469,3	871	586,4	2414	5329,2	1152	775,4	2654	5858,5
10	32.8	117	78,6	816	1800,9	214	144,3	1123	2478,0	440	296,2	1721	3799,3	670	451,1	2268	5006,7	897	603,9	2538	5602,8
12	39.4	79	52,9	658	1452,5	146	98,4	919	2028,8	340	228,7	1423	3142,0	538	362,0	1919	4235,3	729	490,3	2410	5320,8
14	45.9	55	37,3	542	1196,1	105	70,8	771	1702,3	247	166,5	1209	2668,7	444	299,0	1636	3612,0	609	409,5	2059	4546,0

S52SV Circular truss - Allowable Loading

Diameter		3 Suspension Points				4 Suspension Points				6 Suspension Points				8 Suspension Points				10 Suspension Points			
		UDL		CPL		UDL		CPL		UDL		CPL		UDL		CPL		UDL		CPL	
m	ft	kg/m	lbs/ft	kg	lbs	kg/m	lbs/ft	kg	lbs	kg/m	lbs/ft	kg	lbs	kg/m	lbs/ft	kg	lbs	kg/m	lbs/ft	kg	lbs
4	13.1	688	462,7	2325	5131,5	1035	696,5	2806	6195,3	1721	1158,3	3336	7365,1	2390	1608,2	3583	7909,6	3047	2050,2	3712	8195,0
6	19.7	401	269,5	1919	4236,5	631	424,4	2442	5391,8	1095	737,1	3086	6811,9	1549	1042,5	3413	7534,1	1993	1341,5	3592	7929,8
8	26.2	265	178,7	1631	3601,3	435	292,5	2160	4768,2	785	528,5	2869	6333,6	1130	760,7	3258	7191,3	1468	987,7	3479	7680,5
10	32.8	187	125,6	1303	2876,0	321	216,1	1780	3929,0	601	404,8	2680	5915,8	880	592,3	3115	6877,1	1153	775,8	3373	7445,6
12	39.4	126	85,1	1059	2337,3	233	156,7	1463	3229,7	480	323,3	2250	4965,9	714	480,7	2984	6588,0	944	635,0	3272	7223,9
14	45.9	90	60,6	880	1943,3	168	113,2	1234	2723,2	392	263,6	1915	4226,4	596	401,4	2583	5701,3	794	534,6	3178	7014,4

All loading figures are based on Uniformly Divided Suspension Points and a suspended load in each of the fields. In all other cases, this loading data is NOT valid.
If loads are unevenly divided, instability will occur. For more details and loading figures of other diameters, please visit our website.

- The absence of diagonal members at the top and/or bottom side of the truss means a dramatic reduction in the allowable loading; a structural report per situation is required for these models.
- Loading figures are based on Eurocode; to comply with BS 7905-2 / ANSI E1.2-2006 / CWA 15902-2, the loading data must be multiplied by 0.85.
- Truss orientation apex-up/down. Truss 100% horizontal.

CANTILEVER LOAD

Photo by Christi Mitrea: Standard vision, Linkin Park concert Bucharest

Cantilever loads are a common phenomenon in daily practice. It is sometimes hard to predict what will actually happen with regard to loading and the resulting forces in a cantilever span. As an additional service, we have compiled the loading tables for cantilever loads for all our truss types. By using the tables in the following section, you will be able to apply cantilever loads safely and securely. Please be sure to read and understand these loading tables before applying cantilever loads in practice.

E20

E20D - Cantilever load

l_k (m)	P (kg)	q (kg/m)
0,5	162,3	323,9
1,0	93,3	161,2
1,5	64,9	78,2
2,0	49,4	45,6
2,5	39,5	29,6
3,0	32,6	20,6

E20V - Cantilever load

l_k (m)	P (kg)	q (kg/m)
0,5	187,1	374,1
1,0	187,1	186,1
1,5	140,0	123,4
2,0	108,8	92,1
2,5	88,6	63,8
3,0	74,3	45,3

X30

X30D - Cantilever load

l_k (m)	P (kg)	q (kg/m)
0,5	633,5	1697,9
1,0	387,1	631,2
1,5	277,6	318,2
2,0	215,6	191,2
2,5	175,4	127,0
3,0	147,2	90,1

X30V - Cantilever load

l_k (m)	P (kg)	q (kg/m)
0,5	979,7	1959,4
1,0	767,8	977,4
1,5	574,5	611,6
2,0	457,9	380,9
2,5	379,6	259,9
3,0	323,4	188,4
3,5	280,8	142,5

H30

H30D - Cantilever load

l_k (m)	P (kg)	q (kg/m)
0,5	837,8	1696,8
1,0	520,0	834,8
1,5	375,6	425,0
2,0	292,9	256,9
2,5	239,0	171,4
3,0	201,0	122,0

H30V - Cantilever load

l_k (m)	P (kg)	q (kg/m)
0,5	979,2	1958,3
1,0	979,2	976,3
1,5	769,9	649,0
2,0	617,2	485,3
2,5	513,9	347,2
3,0	439,2	252,8
3,5	382,5	191,9

H40

H40D - Cantilever load

l_k (m)	P (kg)	q (kg/m)
0,5	1020,9	2182,2
1,0	670,0	1018,1
1,5	497,4	536,7
2,0	394,4	332,0
2,5	325,7	225,4
3,0	276,6	162,7
3,5	239,6	122,6
4,0	210,6	95,4

H40V - Cantilever load

l_k (m)	P (kg)	q (kg/m)
0,5	1259,6	2519,1
1,0	1256,5	1256,5
1,5	980,6	835,6
2,0	802,7	624,3
2,5	678,2	436,7
3,0	586,1	322,8
3,5	515,0	248,1
4,0	458,4	196,5

H40R - Cantilever load

l_k (m)	P (kg)	q (kg/m)
0,5	1259,5	2518,9
1,0	1256,4	1256,3
1,5	980,4	835,4
2,0	802,5	624,1
2,5	677,9	436,5
3,0	585,7	322,6
3,5	514,6	247,9
4,0	458,0	196,3

- Loading figures are only valid for cantilever spans smaller than the resp. field spans
- A separate calculation is required in the following cases:
  - When dynamic loads or wind loads are involved
  - When more than two supporting points are applied
  - When load is applied in the resp. field spans
- The self-weight of the trusses has been taken into account

CANTILEVER LOAD

S36

S36R - Cantilever load

l_k (m)	P (kg)	q (kg/m)
0,5	1678,2	3968,1
1,0	1278,6	1672,8
2,0	861,1	633,5
2,5	737,8	450,7
3,0	643,9	337,4
3,5	569,8	262,0
4,0	509,7	209,0
4,5	459,8	170,4

S36V - Cantilever load

l_k (m)	P (kg)	q (kg/m)
0,5	1677,7	3966,8
1,0	1277,6	1671,4
2,0	859,3	632,1
2,5	735,6	449,3
3,0	641,3	336,1
3,5	566,8	260,6
4,0	506,4	207,7
4,5	456,2	169,0

B100RV

B100RV - Cantilever load

l_k (m)	P (kg)	q (kg/m)
1,0	3713,2	4230,4
1,5	3298,0	2628,2
2,0	2963,3	1844,0
3,0	2456,0	1086,3
4,0	2088,7	727,4
5,0	1809,4	523,7
6,0	1589,1	395,3
7,0	1410,2	308,5

S52

S52F - Cantilever load

l_k (m)	P (kg)	q (kg/m)
1,0	1249,6	1595,6
2,0	833,1	617,5
3,0	618,3	326,3
4,0	485,8	200,5
4,5	436,7	162,7
5,0	395,1	134,3
5,5	359,4	112,4
6,0	328,4	95,0

S52SV - Cantilever load

l_k (m)	P (kg)	q (kg/m)
1,0	1540,9	1881,2
2,0	1119,8	762,5
3,0	872,6	424,6
4,0	708,9	271,4
4,5	645,8	224,0
5,0	591,6	187,7
5,5	544,3	159,3
6,0	502,7	136,6

S52V - Cantilever load

l_k (m)	P (kg)	q (kg/m)
1,0	1514,3	1861,3
2,0	1091,4	749,2
3,0	846,3	415,1
4,0	685,0	264,3
4,5	623,2	217,7
5,0	570,0	182,2
5,5	523,8	154,3
6,0	483,2	132,1

S66

S66R / S66V- Cantilever load

l_k (m)	P (kg)	q (kg/m)
1,0	1679,5	1980,6
2,0	1274,4	830,9
3,0	1019,6	474,4
4,0	843,4	309,2
4,5	773,9	257,2
5,0	713,4	217,2
5,5	660,2	185,6
6,0	613,0	160,1

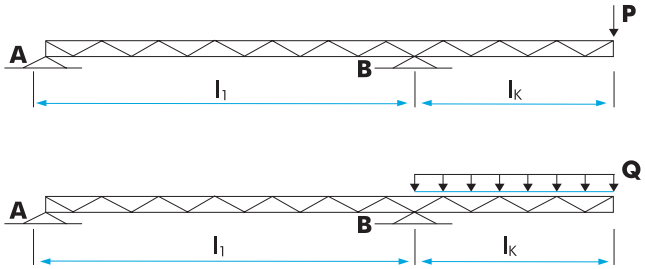

LOADING	
Single load ballast at point A	$(P \times l_k / l_1) \times 1,5$
Distributed load over length l_1	$\left(\frac{Q \times l_k}{2 \times l_1}\right) \times 1,5$

P = kg or N
l = mm or m
Q = total UDL

Point A should have enough ballast weight to avoid the risk of uplifting caused by the cantilever weight P/q.

Loading figures only valid for static loads and spans with two supporting points.

Photo: RSL, The Netherlands.

Corner

All Prolyte truss are complemented by a broad range of standard corners, Box corners and book corners. Combining corners with straight or curved trusses makes it possible to construct an endless variety of structure or grid configurations.

Standard corners

The standard corner range provides 2-to-6-way corners at several angles, from 45 to 135 degrees. In addition, Prolyte manufactures a number of specially designed corners, such as the pyramid corner and swivel corner. For more information on these corners, or on custom-made corners, please contact Prolyte's Internal Sales department.

Box corners

Invented by Prolyte, the Box corner system is revolutionary. A 6-way cube is combined with specially constructed tubes by means of an internal screw thread and hexagon socket bolts. One Prolyte Box corner can be converted into a 2-to-6-way corner as desired simply by mounting the female or male receivers to the corner. The flexibility and fixed dimensions of the Box corner make it a costefficient investment. Box corners are capable of taking 100% of the applied load in a vertical or horizontal direction. This makes the Box corner a fully-fledged construction element, unlike traditional types of corners.

Book corners

The Prolyte book corner enables configuration with angle flexibility. Angles ranging from 0 to 180 degrees can be made using the same corner. The attachments are bolted to the corner, using male or female receivers. The required angle is set with the additional attachment set. The book corner is not designed as a loadbearing element and therefore cannot be part of a structural component. (The book corner must be supported on both sides of the hinge.)

Photo: Riegler Messebau, Italy. Project: Introduction new Porsche.

20 SERIES

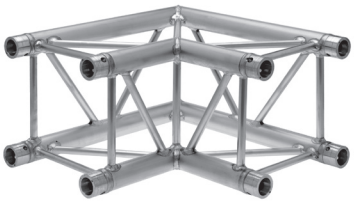

30/40 SERIES

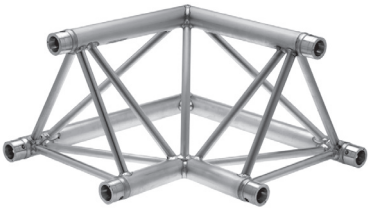

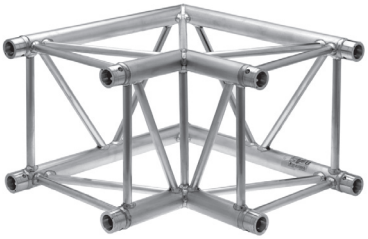

36R/36V

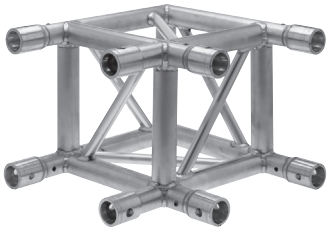

S52F

S100F

LADDER CORNERS X30L / H40L

Ladder Corners

measurements in mm	A	B	C	D	E	F	G	H	J	K	L	M	N	P
X30L	1000	877	913	500	449	471	479	949	300	498	210	333	380	710
H40L	1200	1078	1112	600	549	572	579	1149	258	525	210	376	439	810

C001U - 45°

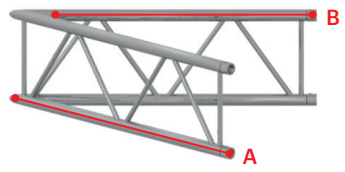

C002U - 60°

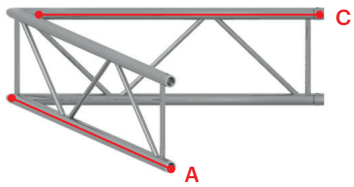

C003U - 90°

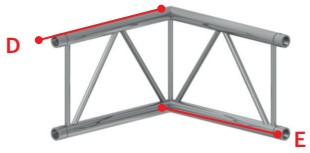

C004U - 120°

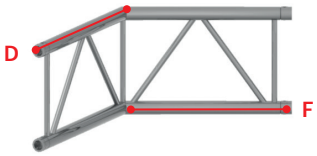

C005U - 135°

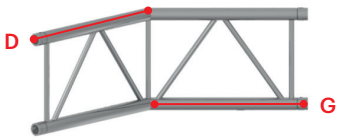

C016U

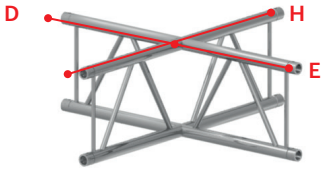

C017U

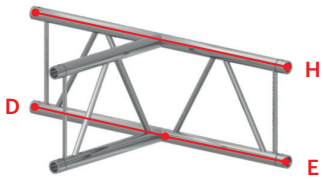

C001F - 45°

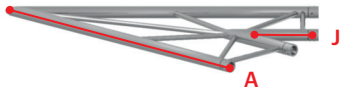

C002F - 60°

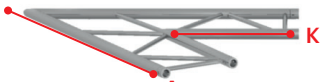

C003F - 90°

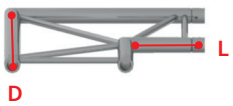

C004F - 120°

C005F - 135°

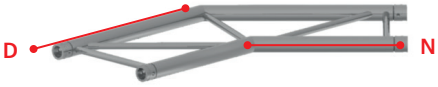

C016F

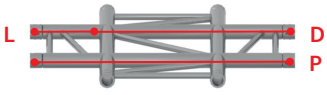

C017F

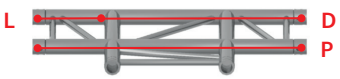

U = LADDER UP
F = LADDER FLAT

TRIANGULAR CORNERS E20D / X/H30D / H40D

Triangular Corners

measurements in mm	A	B	C	D	E	F	G	H	K	L
E20D	800	264	415	400	178	272	308	203	578	603
X/H30D	1000	300	498	500	210	333	380	242	710	742
H40D	1200	258	525	600	210	376	439	255	810	855

C001 - 45°

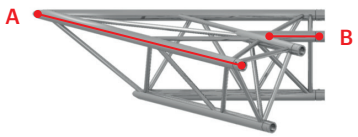

C002 - 60°

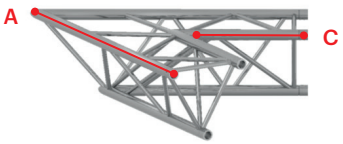

C003 - 90°

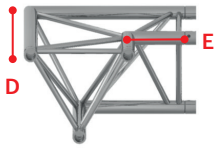

C004 - 120°

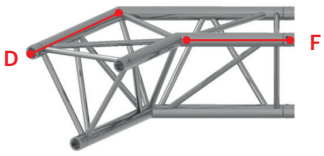

C005 - 135°

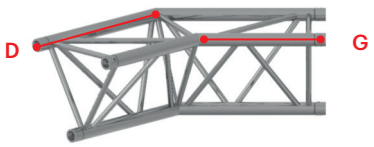

C006

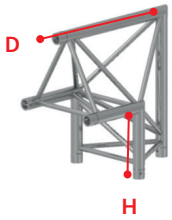

C007

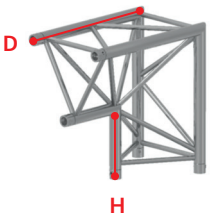

C010

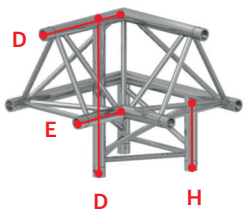

C011

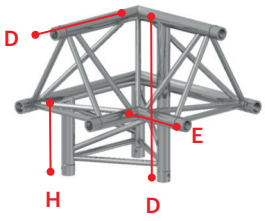

C012

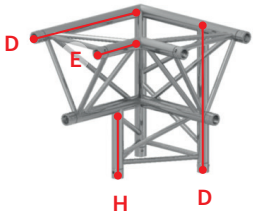

C013

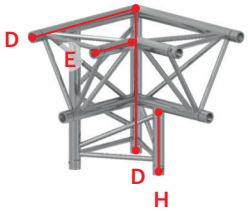

C014

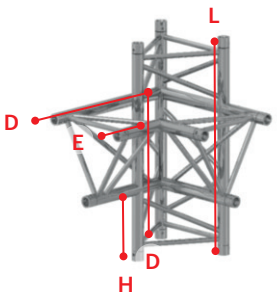

TRIANGULAR CORNERS E20D / X/H30 / H40D

Triangular Corners

measurements in mm	A	B	C	D	E	F	G	H	K	L
E20D	800	264	415	400	178	272	308	203	578	603
X/H30D	1000	300	498	500	210	333	380	242	710	742
H40D	1200	258	525	600	210	376	439	255	810	855

C015

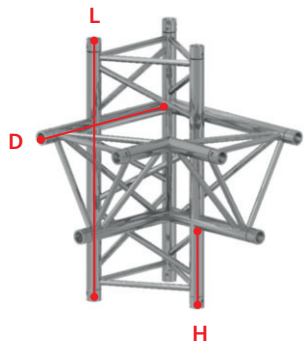

C016

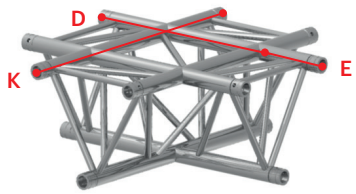

C017

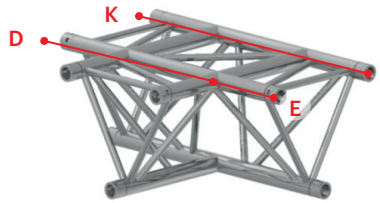

C018

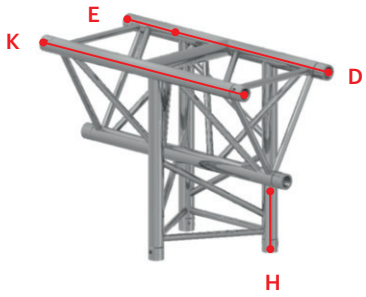

C019

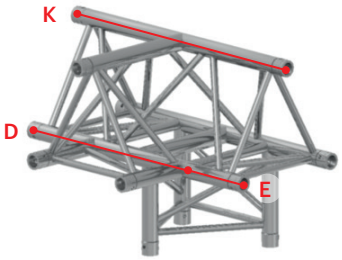

C020

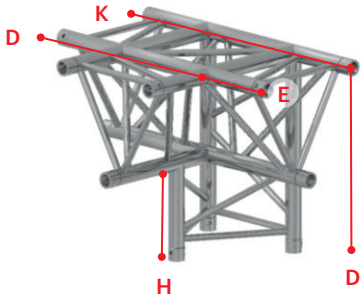

C021

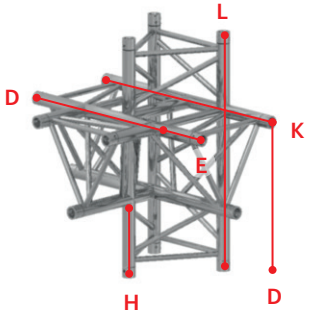

C022

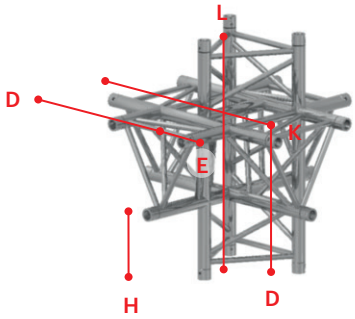

C023

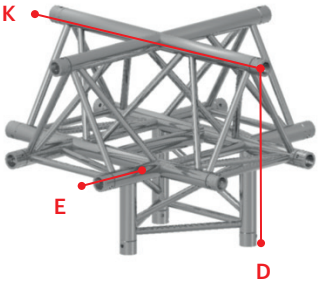

C024

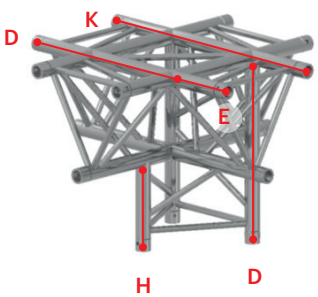

C039

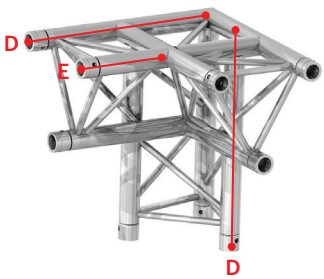

SQUARE CORNERS E20V / X/H30V / H40V

Square Corners

measurements in mm	A	B	C	D	E	F	G	H
E20V	800	264	415	400	178	272	308	578
X/H30V	1000	300	498	500	210	333	380	710
H40V	1200	258	525	600	210	376	439	810

C001 - 45°

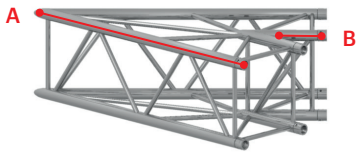

C002 - 60°

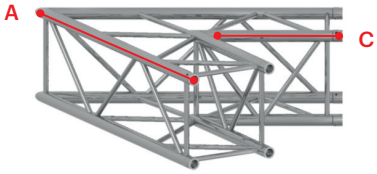

C003 - 90°

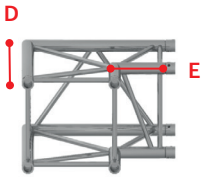

C004 - 120°

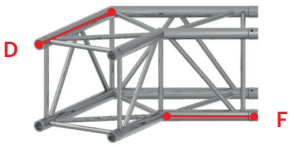

C005 - 135°

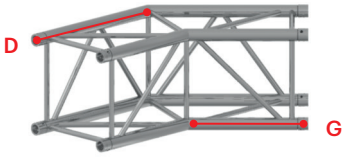

C012

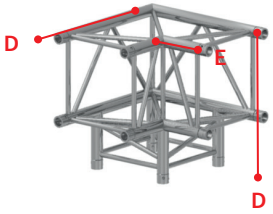

C016

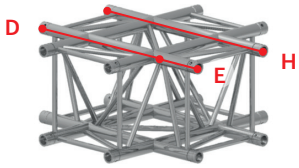

C017

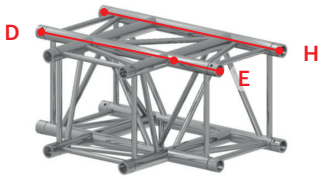

C020

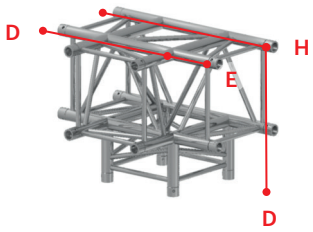

C022

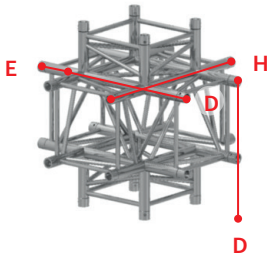

C024

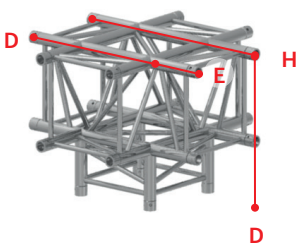

Standard Corners - S36 Series

measurements in mm	A	B	C	D	E
S36R	475	125	600	429	172
S36V	475	125	600	475	125

S36R - C003

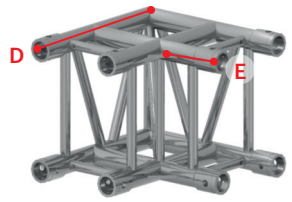

S36R - C007

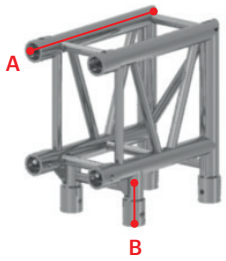

S36R - C012

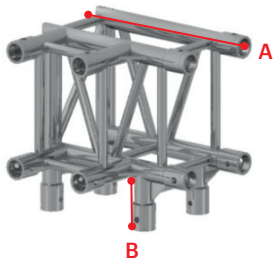

S36R - C013

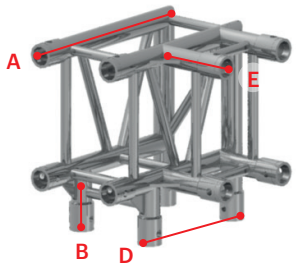

S36R - C016

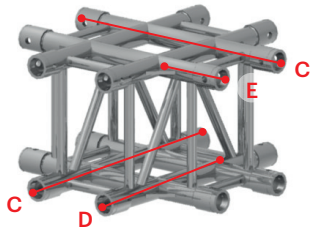

S36R - C017

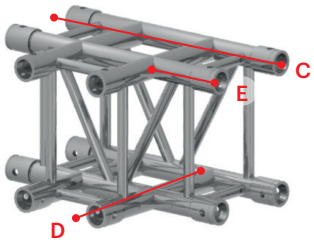

S36V - C003

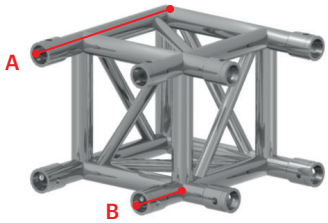

S36V - C012

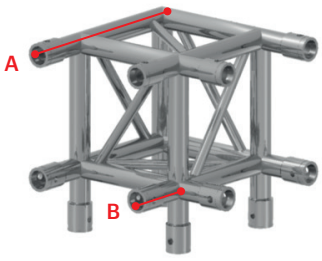

STANDARD CORNERS S52F / S100F

Standard Corners - S52F Series

measurements in mm	A	B	C	D	E	F
S52F	740	655	580	305	85	530

S52F - C003

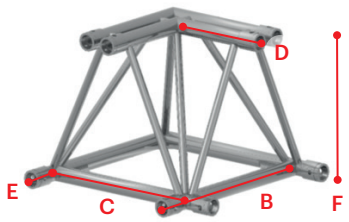

S52F - C016

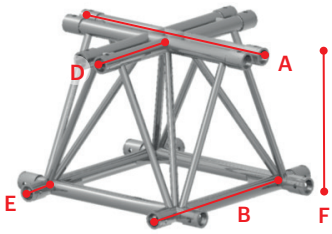

S52F - C017

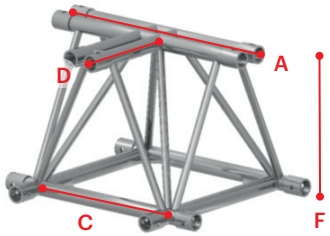

Standard Corners - S100F Series

measurements in mm	A	B	C	D	E	F
S100F	740	655	570	305	85	1010

S100F - C016

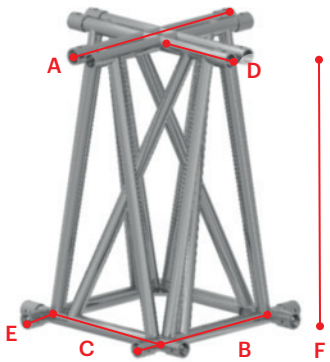

S100F - C017

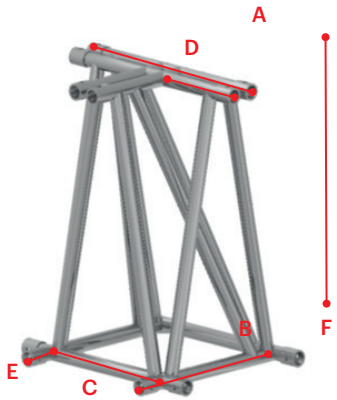

BOX-30V-0

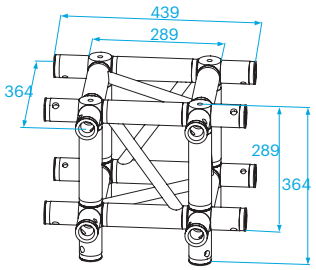

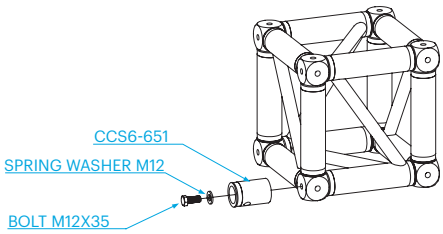

BOX-30L-0

Ladder BoxCorner for X•H30 truss. Measurements.

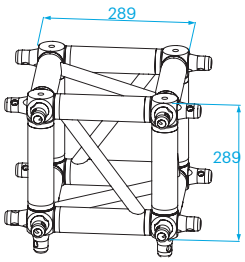

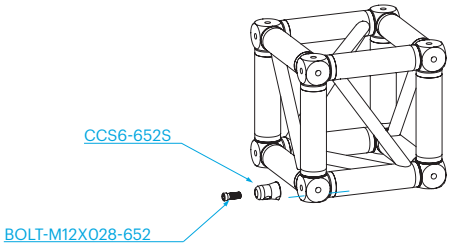

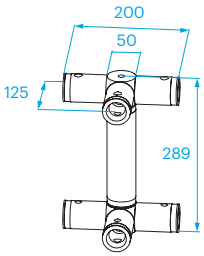

BOX-30 - KIT

Kit for fixation and assembly. CCS6-651 to Box-30V-0.

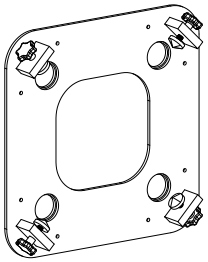

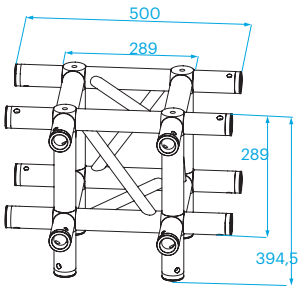

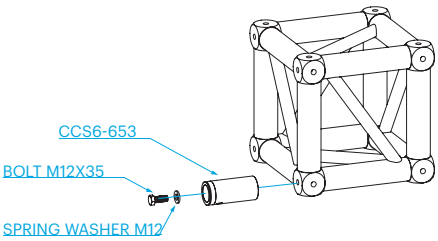

BOX-30V-A-001

BoxCorner for X • H30V truss. Measurements.

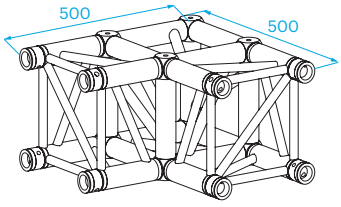

Assembly.

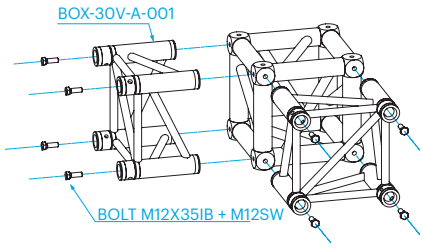

BoxCorner with attachments with same dimensions as standard corner.

BOX-30V-ATT

BoxCorner attachment, pre- assembled CCS6-651 couplers.

Technical specifications - 30V BoxCorners

	0-way		2-way		3-way		4-way		5-way		6-way		coupler	bolt	spring
	kg	lbs	kg	lbs	kg	lbs	kg	lbs	kg	lbs	kg	lbs			washer
	9,9	21.2	12,2	26.9	13,5	29.8	14,8	32.7	16,1	35.5	17,4	38.4	CCS6 - 651	BM-M12x035	BM-M12xSW
													CCS6 - 652	BM12x028 - 652	-
													CCS6 - 653	BM-M12x035	BM-M12xSW

1 inch = 25,4 mm | 1 m = 3.28 ft | 1 lbs = 0,453 kg | 1 daN = 10 N ~ 1 kg

BOX-40V-0

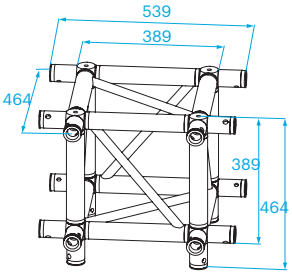

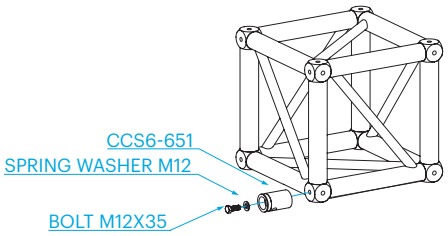

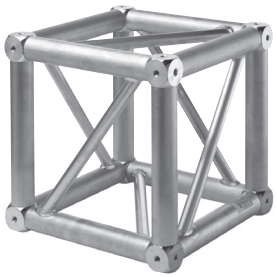

BOX-40L-0

Ladder BoxCorner for H40 truss. Measurements.

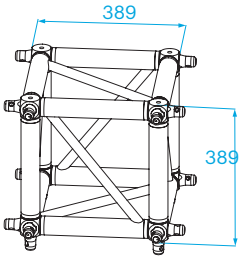

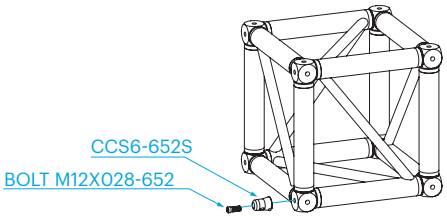

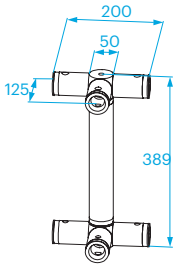

BOX-40-KIT

Kit for fixation and assembly. CCS6-651 to Box-40V-0.

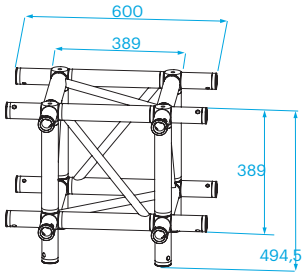

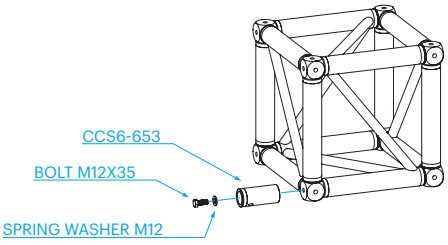

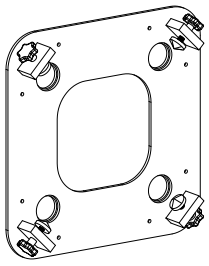

BOX - 40V - A001-A-001

BoxCorner for H40V truss. Measurements.

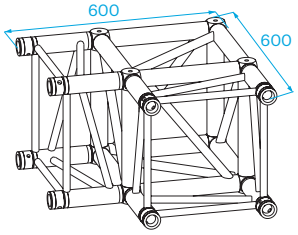

Assembly.

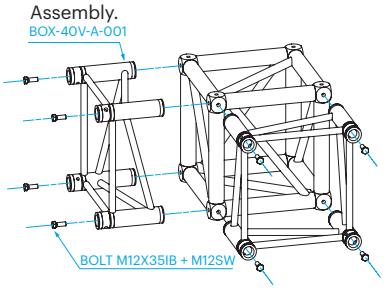

BOX-40V-ATT

BoxCorner attachment, pre- assembled CCS6-651 couplers.

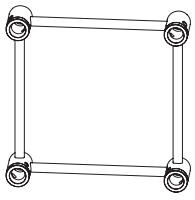

BoxCorner with attachments with same dimensions as standard corner.

Technical specifications - 40V BoxCorners

	0-way		2-way		3-way		4-way		5-way		6-way		coupler	bolt	spring
	kg	lbs	kg	lbs	kg	lbs	kg	lbs	kg	lbs	kg	lbs			washer
	11,5	25.4	14,1	31.1	15,4	34.0	16,7	36.9	18,0	39.7	19,3	42.6	CCS6 - 651	BM-M12X035	BM-M12-SW
													CCS6 - 652	BM12x028 - 652	-
													CCS6 - 653	BM-M12X035	BM-M12-SW

1 inch = 25,4 mm | 1 m = 3.28 ft | 1 lbs = 0,453 kg | 1 daN = 10 N ~ 1 kg

BOX-40R-0

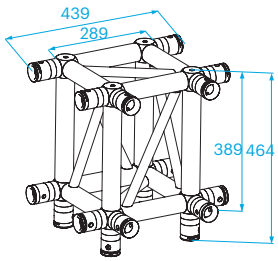

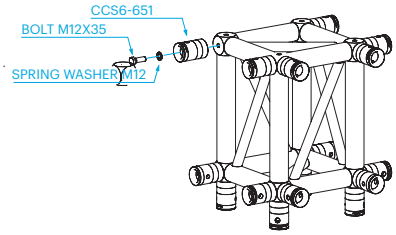

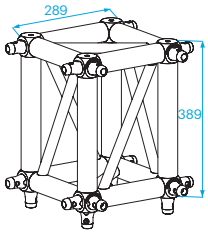

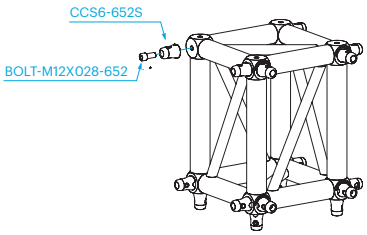

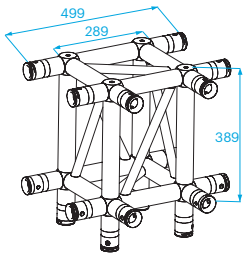

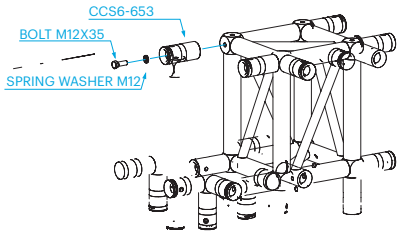

BOX-40R-A-001

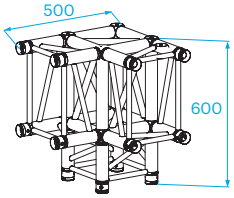

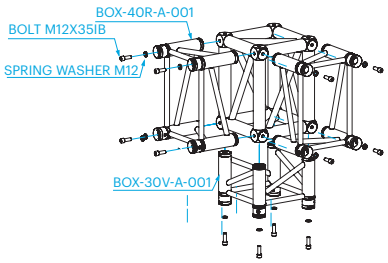

BOX-36V-0

BoxCorner for S36V truss.

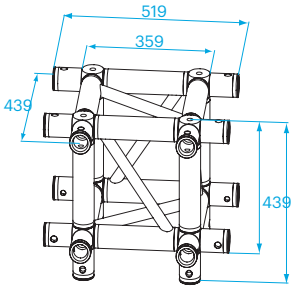

Assembly

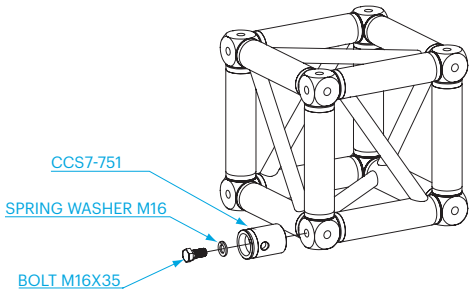

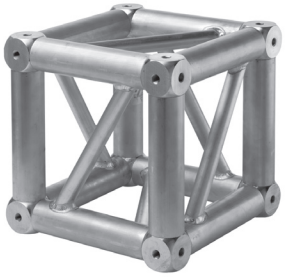

BOX-36R-0

BoxCorner for S36R truss.

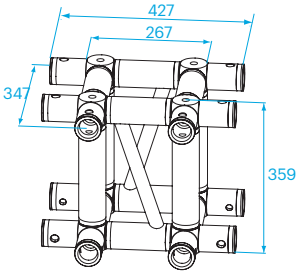

Assembly

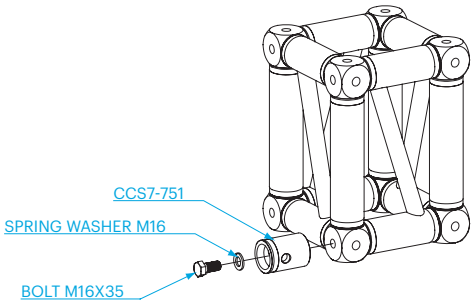

ADAPTER S36R

Also available for a symmetrical setup with female couplers or an asymmetrical setup with female couplers.

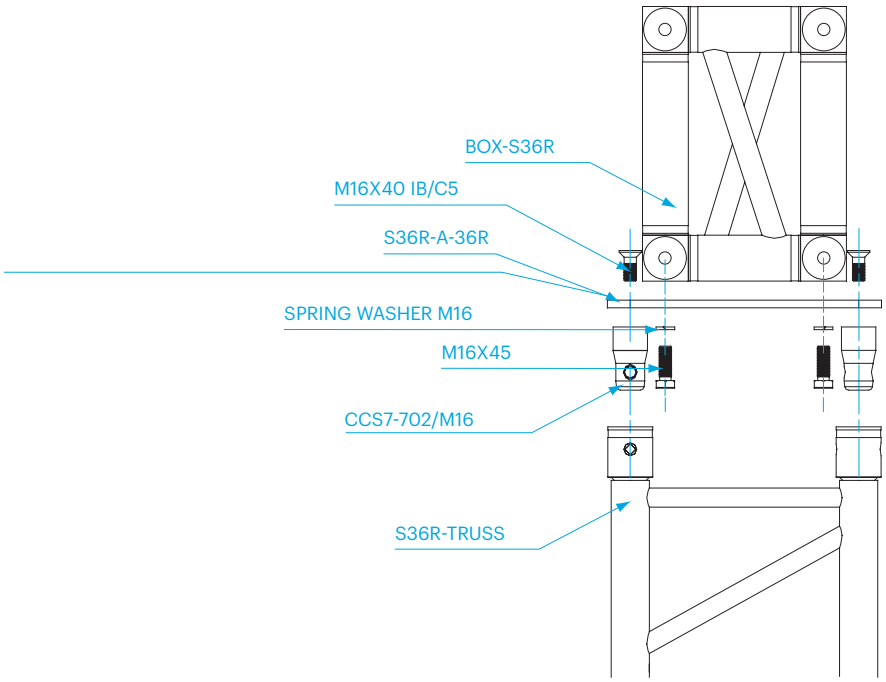

Technical specifications S36 BoxCorners

	0-way		2-way		3-way		4-way		5-way		6-way		coupler	bolt	spring
	kg	lbs	kg	lbs	kg	lbs	kg	lbs	kg	lbs	kg	lbs			washer
Box - 36R	15,9	35.1	17,7	39.1	19,5	43.0	21,2	46.8	23,0	50.8	24,8	54.7	CCS7-751	BM-M16x035	BM-M16-SW
Box - 36V	21,0	46.4	22,8	50.3	24,5	54.1	26,3	58.1	28,1	62.0	29,9	66.0	CCS7-751	BM-M16x035	BM-M16-SW

1 inch = 25,4 mm | 1 m = 3.28 ft | 1 lbs = 0,453 kg | 1 daN = 10 N ~ 1 kg

BOX-52V-0

BoxCorner for S52/SV truss.

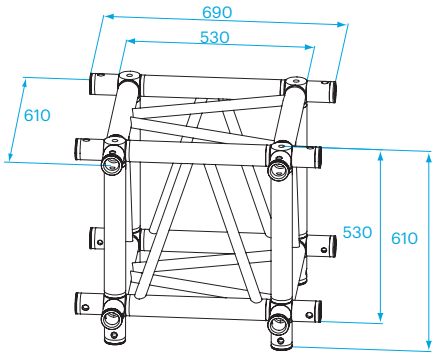

Assembly

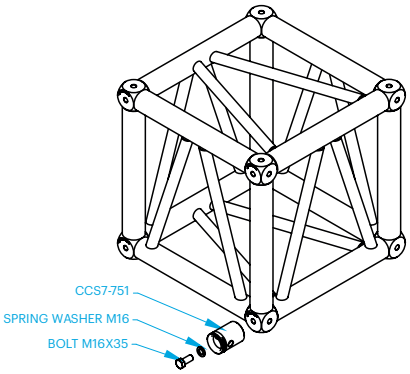

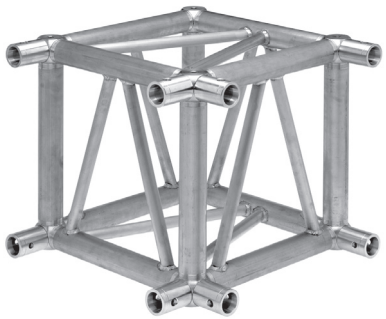

Technical specifications - S52 BoxCorners

	0-way		2-way		3-way		4-way		5-way		6-way		coupler	bolt	spring
	kg	lbs	kg	lbs	kg	lbs	kg	lbs	kg	lbs	kg	lbs			washer
Box - 52V / SV	22,7	50.1	24,5	54.1	26,3	58.1	28,0	61.8	29,8	65.8	31,6	69,8	CCS7-751	BM-M16-035	BM-M16-SW

1 inch = 25,4 mm | 1 m = 3.28 ft | 1 lbs = 0,453 kg | 1 daN = 10 N ~ 1 kg

BOX-66R-0

BoxCorner for S66R truss.

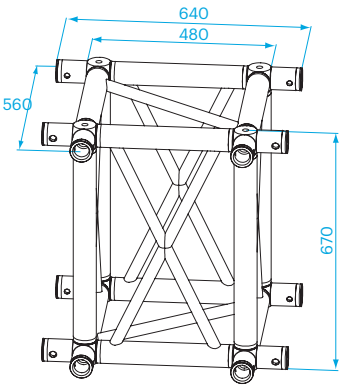

BOX-66V-0

BoxCorner for S66V truss.

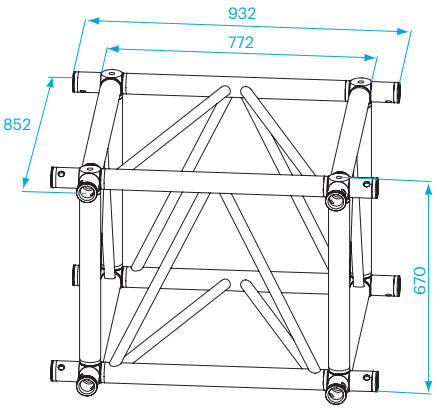

Technical specifications - S66 BoxCorners

	0-way		2-way		3-way		4-way		5-way		6-way		coupler	bolt	spring
	kg	lbs	kg	lbs	kg	lbs	kg	lbs	kg	lbs	kg	lbs			washer
Box - 66R	24,2	53.4	26	57.4	29,6	65.3	31,3	69.1	33,1	73.1	34,9	77	CCS7-751	M16x35	M16
Box - 66V	28,2	62.3	30	66.2	31,8	70.2	33,5	74	35,3	77.9	37,1	81.9	CCS7-751	M16x35	M16

1 inch = 25,4 mm | 1 m = 3.28 ft | 1 lbs = 0,453 kg | 1 daN = 10 N ~ 1 kg

BOX-100RV-0

BoxCorner for B100RV truss.

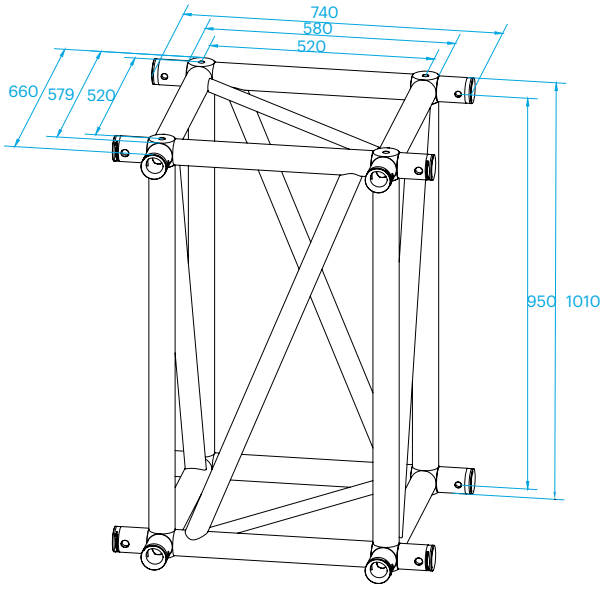

Assembly (1 : 10)

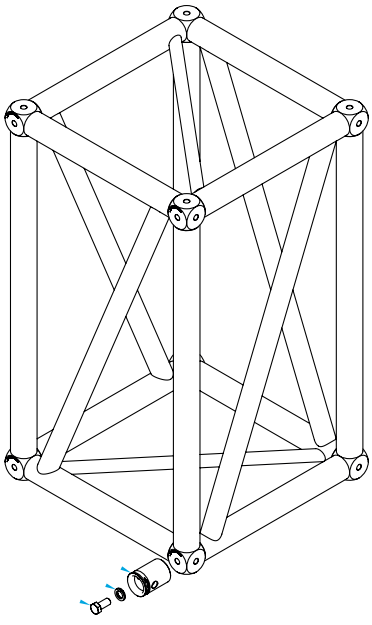

CCS7-751
SPRING WASHER M16
BOLT M16X35

Technical specifications - B100RV BoxCorners

	0-way		2-way		3-way		4-way		5-way		6-way		bot	nordlock
	kg	lbs	kg	lbs	kg	lbs	kg	lbs	kg	lbs	kg	lbs		
Box - 100RV	36.1	79.67	39.7	87.62	41.5	91.59	43.3	95.56	45.1	99.53	46.9	103.51	BM-M16x035	BM-M16-nordl

1 inch = 25,4 mm | 1 m = 3.28 ft | 1 lbs = 0,453 kg | 1 daN = 10 N ~ 1 kg

BOOK-30D/V

Assembly

Book corners can not be used as load bearing component. Loading should be supported form both sides of the book corner.

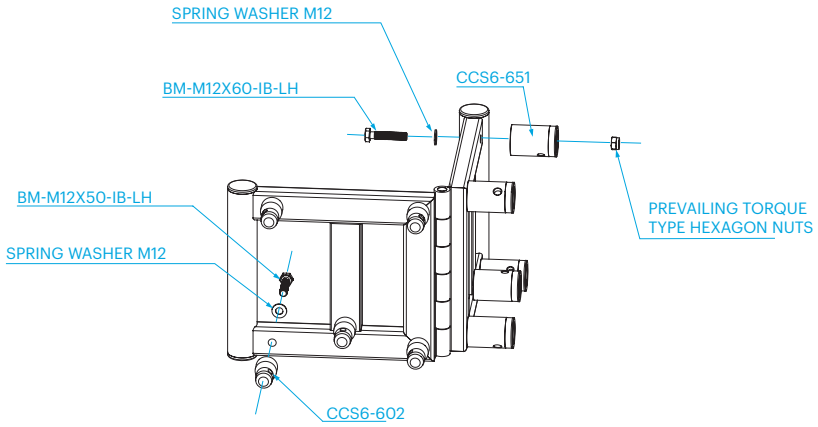

Book corner for 30D/V truss.

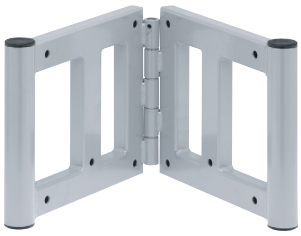

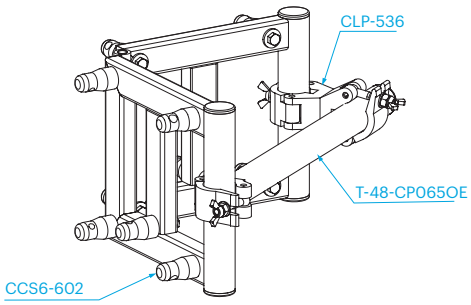

Technical specifications - Book Corners 30D/V

	kg	lbs	male coupler	bolt	female coupler	bolt	nut	spring washer
Book - 30D/V	12,0	26.5	CCS6 - 602	M12x55	CCS6 - 651	BM-M12x060	BM-M12-SN	BM-M12-SW

1 inch = 25,4 mm | 1 m = 3.28 ft | 1 lbs = 0,453 kg | 1 daN = 10 N ~ 1 kg

BOOK-40D/V

Assembly

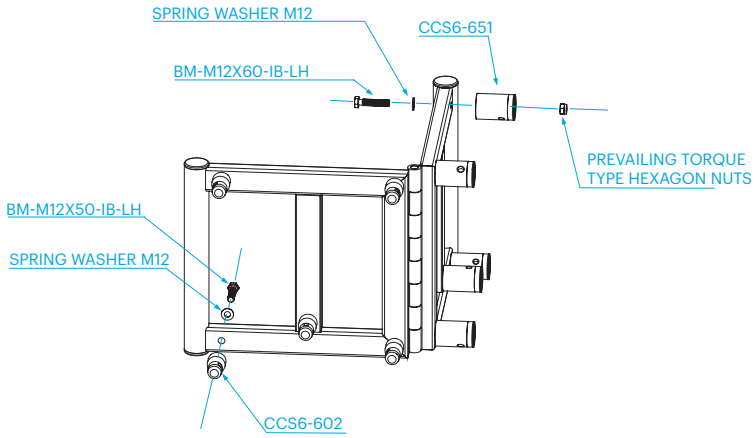

Book corner for 40D/V truss.

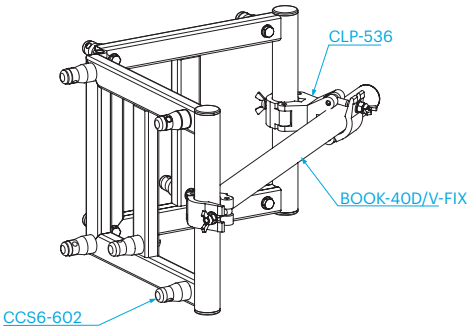

Technical specifications - Book Corners 40D/V

	kg	lbs	male coupler	bolt	female coupler	bolt	nut	spring washer
Book -40D/V	15,5	34.2	CCS6 - 602	M12x55	CCS6 - 651	BM-M12x060	BM-M12-SN	BM-M12-SW

1 inch = 25,4 mm | 1 m = 3.28 ft | 1 lbs = 0,453 kg | 1 daN = 10 N ~ 1 kg

BOOK-36R/V

Book corner for 36V truss.

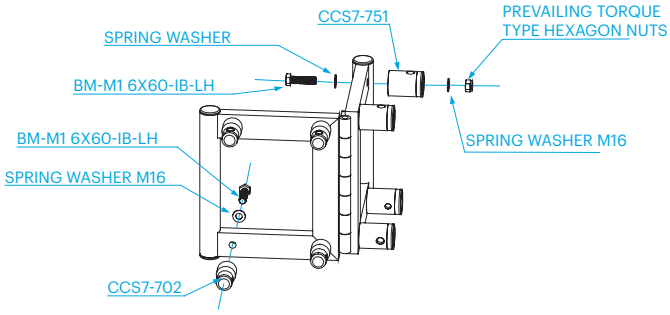

Book corner for 36R truss.

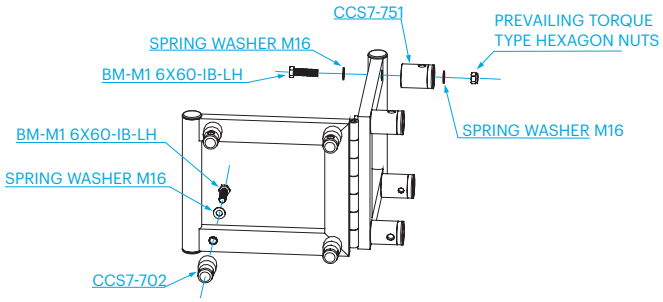

Technical specifications - Book Corners 36R/V

	kg	lbs	male coupler	bolt	female coupler	bolt	nut	spring washer
Book - 36R	16,2	35.8	CCS7-702	M16x60	CCS7-751	BM-M16x060	BM-M16-SN	BM-M16-SW
Book - 36V	17,2	38.0	CCS7-702	M16x60	CCS7-751	BM-M16x060	BM-M16-SN	BM-M16-SW

1 inch = 25,4 mm | 1 m = 3.28 ft | 1 lbs = 0,453 kg | 1 daN = 10 N ~ 1 kg

BOOK-52F

Book corner for 52F truss.

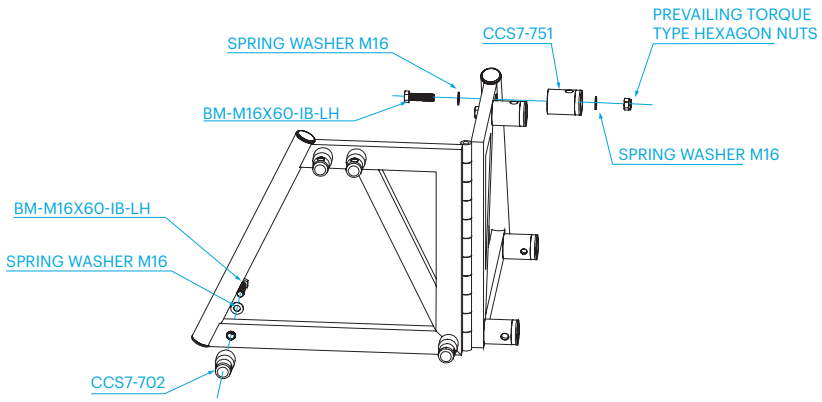

Technical specifications - Book Corners 52F

	kg	lbs	male coupler	bolt	female coupler	bolt	nut	spring washer
Book - 52F	21,5	47.5	CCS7-702	M16x60	CCS7-751	BM-M16x060	BM-M16-SN	BM-M16-SW
Book - 52S/SV	20,7	45.7	CCS7-702	M16x60	CCS7-751	BM-M16x060	BM-M16-SN	BM-M16-SW

1 inch = 25,4 mm | 1 m = 3.28 ft | 1 lbs = 0,453 kg | 1 daN = 10 N ~ 1 kg

Heavy Duty Box Corner is a fully plated and bolted element and therefore is much stronger than the regular box corner. This allows you to build any 2D or 3D structures without losing involuntary strength due to the corner types used.

Due to its clever design, where the plated sides interlock with each other, the exact 90-degree shape is guaranteed. In combination with the narrow tolerances, this box corner is suitable to use in combination with the Verto truss as well. Furthermore, the plates can easily be changed in case of damages, offering an efficient and cost effective solution.

BOX-30V-HD-0

Heavy duty box corner for 30V truss.

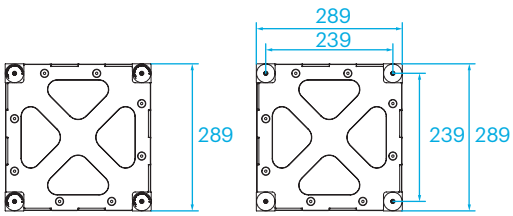

Top view Front view

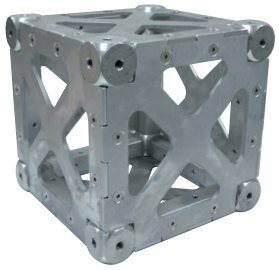

Technical Specifications Boxcorner 30V HD	
Alloy	EN-AW6082T6
Bolts	Grade 8.8
Self weight	12.5 kg

BOX-40V-HD-0

Heavy duty box corner for 40V truss.

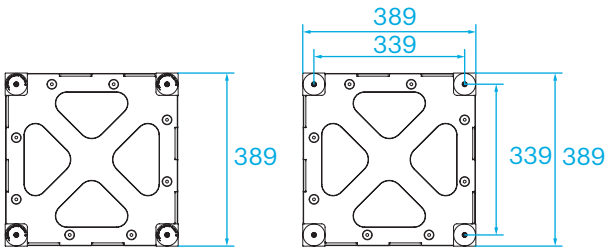

Top view Front view

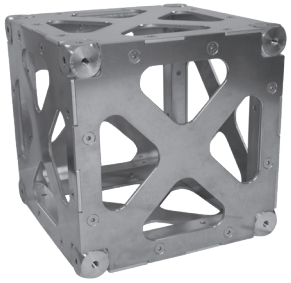

Technical Specifications Boxcorner 40V HD	
Alloy	EN-AW6082T6
Bolts	Grade 8.8
Self weight	24.5 kg

BOX-40R-HD-0

Heavy duty box corner for 40R truss.

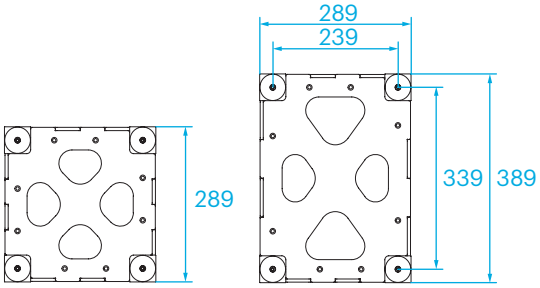

Top view Front view

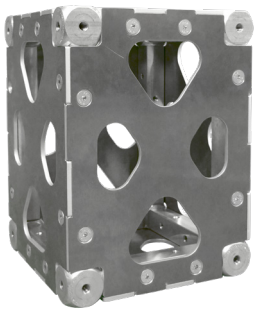

Technical Specifications Boxcorner 40R HD	
Alloy	EN-AW6082T6
Bolts	Grade 8.8
Self weight	18.5 kg

In horizontal direction the boxcorner takes the H40R truss and in vertical direction the boxcorner takes the H30V truss.

Photo: © the Prolyte. Omke Oudeman.

Couplers

When Prolyte designed the original Conical Coupling System (CCS®), it represented a huge step forward in the development of truss systems. Even today, the now much-copied Conical Coupling System is unrivalled in efficiency, strength and ease of assembly. Exhibiting significant advantages over other types of connection systems, the innovative Conical Coupling System has gained a worldwide reputation for excellence and efficiency. The Conical Coupling System is available for all Prolyte truss systems and is deliverable in 3 sizes: CCS4, CCS6 and CCS7. A variety of special coupling configurations is also available. With strong and rigid connections, the Conical Coupling System makes the assembly of your truss system safe, fast and easy.

Accessories

Prolyte accessories are a range of additional products that can be used in combination with the Prolyte trusses or other complementary products.

This section presents a selection of accessories that might prove helpful in the assembly or setting-up of your truss constructions. Prolyte accessories all have one thing in common: they have been developed to help you realize the many possibilities and full potential offered by your Prolyte truss system. All Prolyte accessories are designed and manufactured to the highest industry standards, and all comply with safety regulations and, where applicable, are TUV approved. Prolyte accessories are divided into four categories: clamps, followspot chairs, exhibition products and rigging gear.

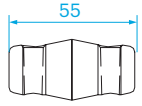

CCS4-400	weight = 0,058 kg
Conical coupler	

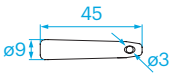

CCS4-403	weight = 0,017 kg
Spigot CCS4-403-RF (stainless steel)	To be used with CCS6 - 605 safety R-spring

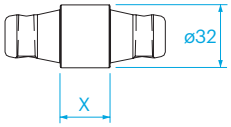

CCS4-S05 through CCS4-S50	weight = 0,070 - 0,170 kg
Spacers	X = 5 mm to 50 mm in steps of 5 mm

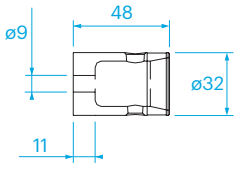

CCS4-451	weight = 0,065 kg
Female conical coupler	With 9 mm hole for bolts M8

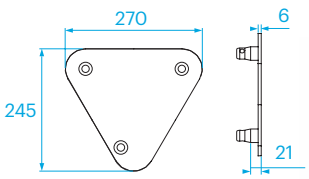

BASE 20D	weight = 0,740 kg
Baseplate for E20D truss incl:	
CCS4-402	Offset half conical coupler
BM-M6x020-IB-CS	Bot M6x20mm countersunk

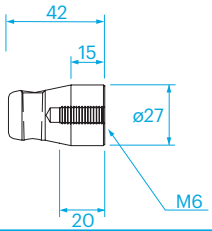

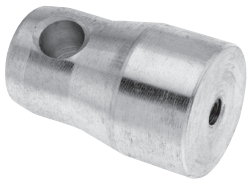

CCS4-402	weight = 0,050 kg
Offset half conical coupler	Offset 15 mm, thread M6

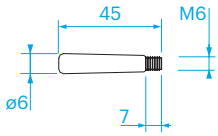

CCS4-404	weight = 0,017 kg
Spigot with tread M6 CCS4 - 404-RF (stainless steel)	To be used with selflocking nut BM-M6-SN

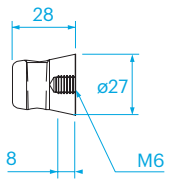

CCS4-450	weight = 0,029 kg
Half conical coupler	Offset 0 mm, thread M6

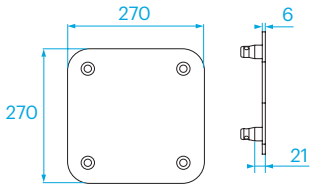

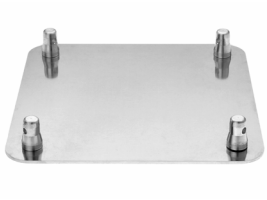

BASE 20V	weight = 1,170 kg
Baseplate for E20V truss incl:	
CCS4-402	Offset half conical coupler
BM-M6x020-IB-CS	Bot M6x20mm countersunk

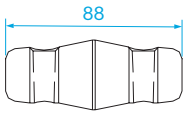

CCS6-600	weight = 0,148 kg
Conical coupler	

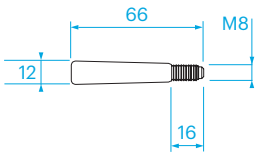

CCS6-604	weight = 0,040 kg
Spigot with thread M8 CCS6 - 604RF (stainless steel)	To be used with selflocking nut BM-M8-SN

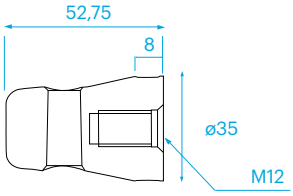

CCS6-649	weight = 0,09 kg
Half conical coupler baseplate	Offset 8 mm, thread M12

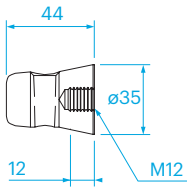

CCS6-650	weight = 0,069 kg
Half conical coupler	Offset 0 mm, thread M12

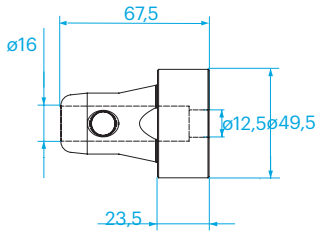

CCS6-652-23,5	weight = 0,469 kg
Half coniccal coupler	Offset 23,5 mm, 12,5 mm hole
	To be used with a M12 Hexagon head

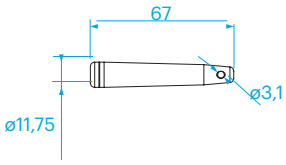

CCS6-603	weight = 0,042 kg
Spigot CCS6-603RF (stainless steel)	To be used with CCS6-605 safety R-spring

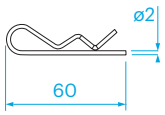

CCS6-605	weight = 0,003 kg
Safety R-spring	

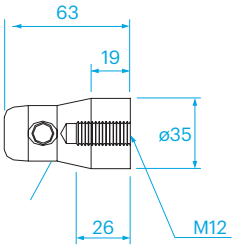

CCS6-602	weight = 0,116 kg
Offset half conical coupler	Offset 19 mm, thread M12

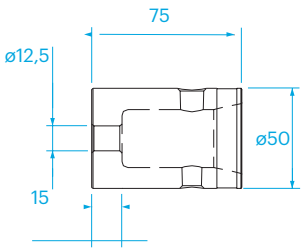

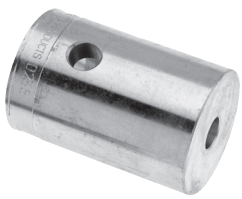

CCS6-651	weight = 0,280 kg
Female coniccal coupler	With 12,5 mm hole for bolts M12

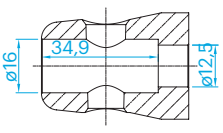

CCS6-652S	
Male coupler 600 half	With 12,5 mm hole for bolts M12
BM - M12 x 028 - 652.	Bolt M12 x 028 bolt for CCS6 - 652S

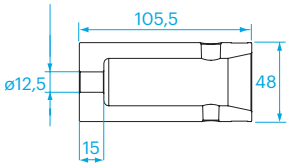

CCS6-653	weight = 0,360 kg
Female conical coupler	With 12,5 mm hole for bolts M12

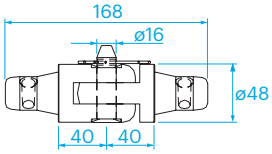

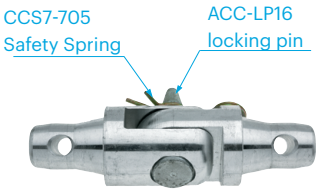

CCS6-H	weight = 0,590 kg
Hinge for MPT Tower or ST Tower, 4 hinges per tower needed. See BlackBook "Technical Matters" for the use of hinges in different setups.	

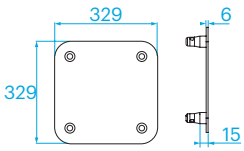

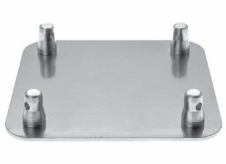

BASE 30V	weight = 1,860 kg
Baseplate for X•H30D truss incl:	
CCS6-649	Conical half coupler
BM-M12X020-IB-CS	Bot M12X20mm countersunk

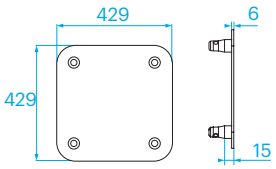

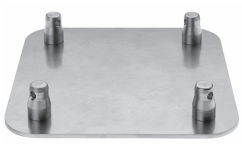

BASE 40V	weight = 2,820 kg
Baseplate for H40D truss incl:	
CCS6-649	Conical half coupler
BM-M12X020-IB-CS	Bot M12X20mm countersunk

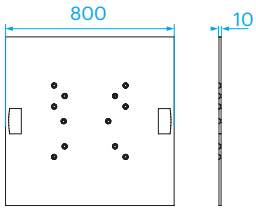

BASE-30-40-SS-BC	weight = 49 kg
Base steel 30-40 series 800x10 mm round black coated;	
BASE-30-40-SS-G	- Galvanized
CCS6-649	Conical half coupler
BM-M12X020-IB-CS	Bot M12X20mm countersunk

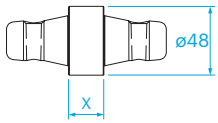

CCS6-S02 through CCS6-S50	weight = 0,187 kg - 0,404 kg
Spacers	X = 2 mm to 50 mm in steps of 5 mm

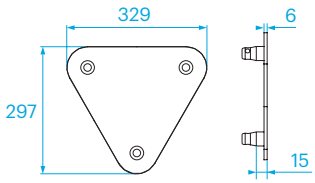

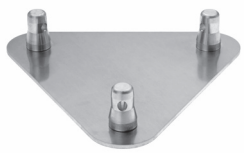

BASE 30D	weight = 1,160 kg
Baseplate for X•H30D truss incl:	
CCS6-649	Conical half coupler
BM-M12X020-IB-CS	Bot M12X20mm countersunk

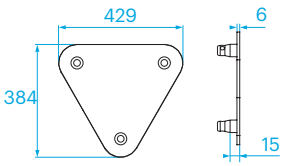

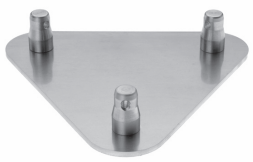

BASE 40D	weight = 2,700 kg
Baseplate for H40D truss incl:	
CCS6-649	Conical half coupler
BM-M12X020-IB-CS	Bot M12X20mm countersunk

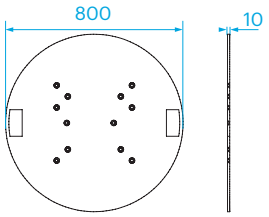

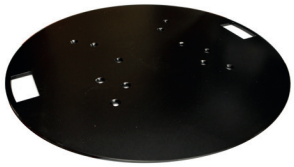

BASE-30-40-RS-BC	weight = 38 kg
Base steel 30-40 series 800x10 mm round black coated;	
BASE-30-40-RS-G	- Galvanized
CCS6-649	Conical half coupler
BM-M12X020-IB-CS	Bot M12X20mm countersunk

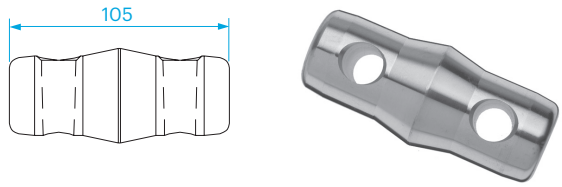

CCS7-700	weight = 0,310 kg
Conical coupler	

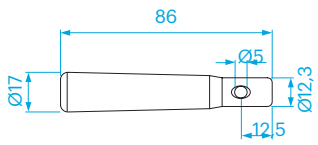

CCS7-703-C52T	weight = 0,110 kg
Spigot (Flush with truss)	To be used with CT Towers.

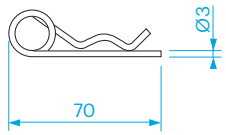

CCS7-705	weight = 0,012 kg
Safety R-spring	

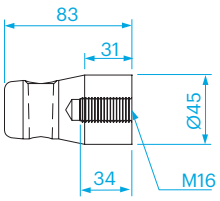

CCS7-702/16	weight = 0,260 kg
Offset half conical coupler	Offset 31 mm, thread M16

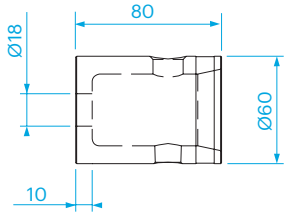

CCS7-751	weight = 0,350 kg
Female conical coupler	With 18 mm hole for bolts M16

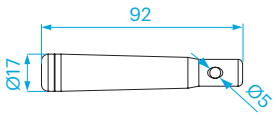

CCS7-703	weight = 0,115 kg
Spigot	To be used with CCS7 - 705

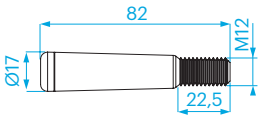

CCS7-704	weight = 0,125 kg
Spigot with thread M12 CCS7 - 704RF (stainless steel)	To be used with selflocking nut BM-M12-SN

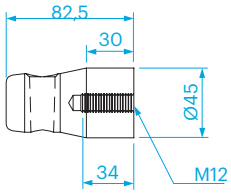

CCS7-702/12	weight = 0,265 kg
Ofsett half conical coupler	Offset 31 mm, thread M12

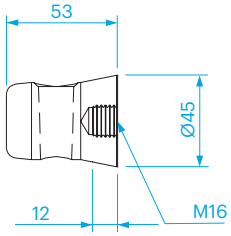

CCS7-750	weight = 0,150 kg
Half conical coupler	Offset 0 mm, thread M16

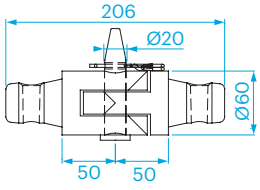

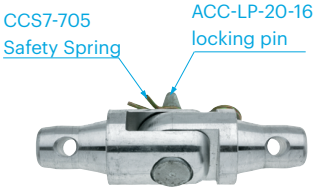

CCS7-H-O / CCS7-H-90	weight = 1,240 kg
Hinge for 36V and 52V truss. See BlackBook “Technical Matters” for the use of hinges in different setups.	

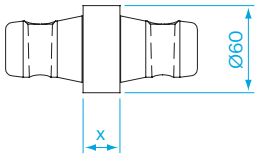

CCS7-S10 through CCS7-S50	**weight = 0,350 kg - 0,360 kg**
Spacers	x = 2 mm to 50 mm, in steps of 5 mm (minimum of 2 mm)

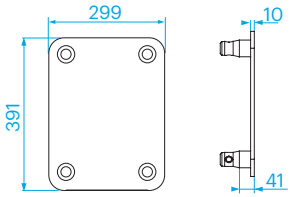

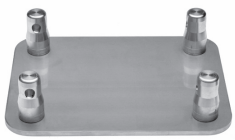

BASE 36R	**weight = 1,860 kg**
Baseplate for 36R truss incl:	
CCS7-702/16 Conical half coupler	
BM-M16X040-IB-CS bolt	

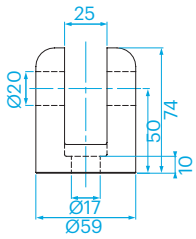

CCS7-H-FM-BOLT	**weight = 0,326 kg**

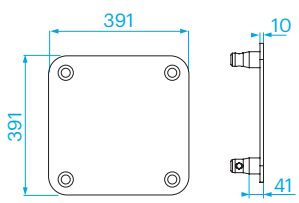

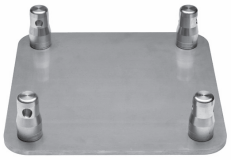

BASE 36V	**weight = 1,160 kg**
Baseplate for 36V truss incl:	
CCS7-702/16 Conical half coupler	
BM-M16X040-IB-CS bolt	

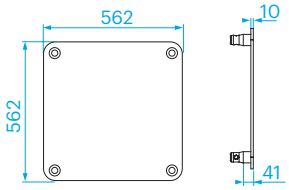

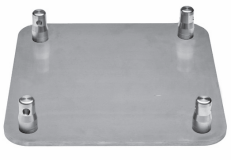

BASE 52V	**weight = 2,700 kg**
Baseplate for 52V truss incl:	
CCS7-702/16 Conical half coupler	
BM-M16X040-IB-CS bolt	

TOOL - HAM - 500 / TOOL - HAM - 750
Copper hammer

The clamps are designed to fit a 32 mm (1 1/4") to 35 mm (1 3/8") tubes and are extruded from a high tensile aluminium alloy.

Technical features:

- Compatible with the E20 Series truss
- Rated with safety factor 8:1 (kg) DGUV17/BGV C1
- Polished surface with laser markings
- Interchangeable M10 screw whichs ensures flexible attachment points
- Black anodized standard available, other colours on request

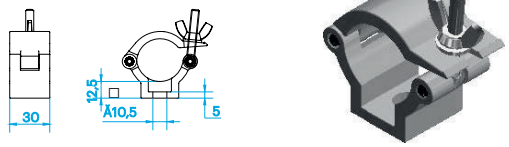

CLP-P435	weight = 0.08 kg
Clamp (32-35 mm)	SWL 160 kg (SF 8:1)

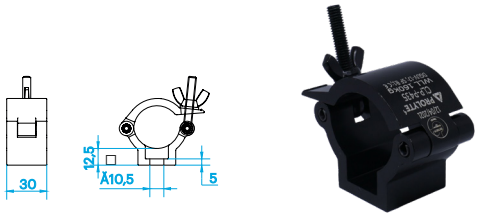

CLP-P435B (Black)	weight = 0.08 kg
Clamp (32-35 mm)	SWL 160 kg (SF 8:1)

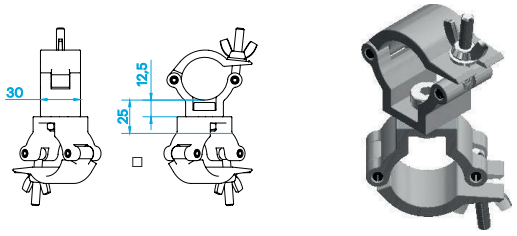

CLP-P436	weight = 0.16 kg
Swivel coupler (32-35 mm)	SWL 160 kg (SF 8:1)

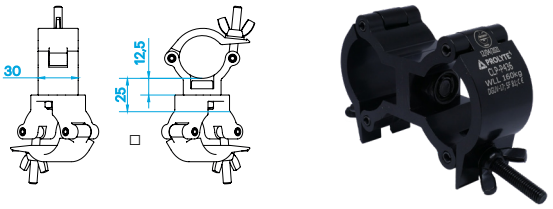

CLP-P436B (Black)	weight = 0.16 kg
Swivel coupler (32-35 mm)	SWL 160 kg (SF 8:1)

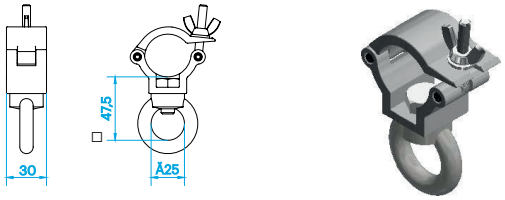

CLP-P437	weight = 0.28 kg
Clamp with eye nut (32-35 mm)	SWL 160 kg (SF 8:1)

The clamps are designed to fit a 48 mm (1 7/8") to 51 mm (2") tubes and are extruded from a high tensile aluminium alloy.

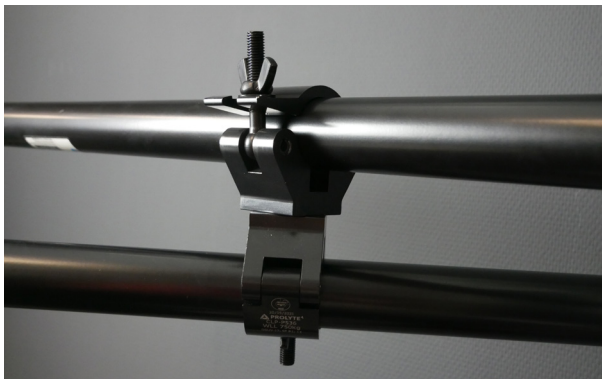

Technical features:

- Compatible with the X/H30 and 40, S36, S40, S52, S66 and S100 Series truss
- Rated with safety factor 8:1 (kg) DGUV1722/BGV C1
- Polished surface with laser markings
- Equipped with a M12 Bolt and wingnut
- Black anodized standard available, other colours on request

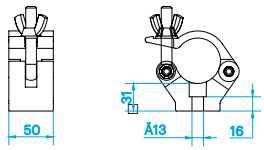

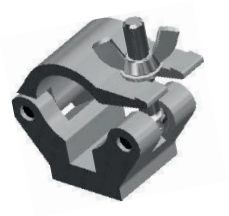

CLP-P535	weight = 0.28 kg
Clamp (48-51 mm)	SWL 650 kg (SF 8:1)

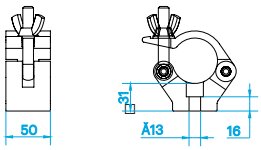

CLP-P535B (Black)	weight = 0.28 kg
Clamp (48-51 mm)	SWL 650 kg (SF 8:1)

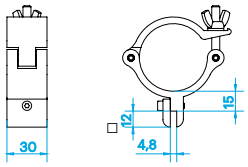

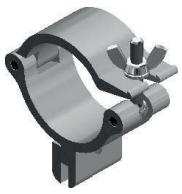

CLP-P535-FPC	weight = 0.22 kg
Panel holder (48-51 mm)	SWL 55 kg (SF 8:1)

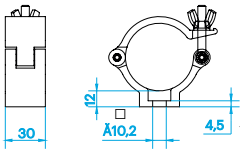

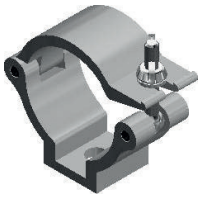

CLP-P535L	weight = 0.14 kg
Clamp (48-51 mm)	SWL 230 kg (SF 8:1) kg

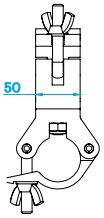

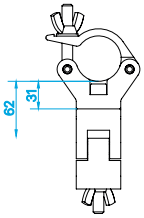

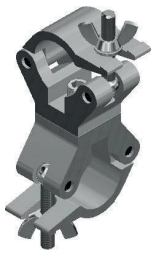

CLP-P536	weight = 1.34 kg
Swivel coupler (48-51 mm)	SWL 540 kg (SF 8:1)

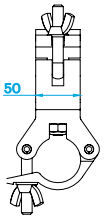

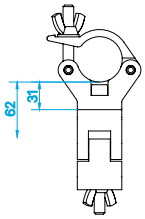

CLP-P536B (Black)	weight = 1.34 kg
Swivel coupler (48-51 mm)	SWL 540 kg (SF 8:1)

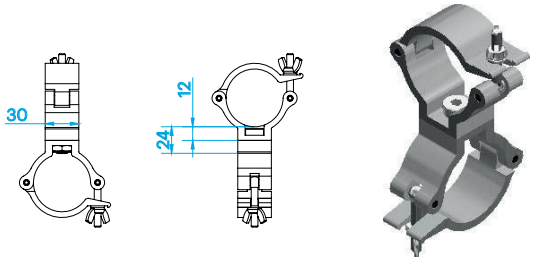

CLP-P536L	weight = 0.27 kg
Swivel coupler (48-51 mm)	SWL 230 kg (SF 8:1)

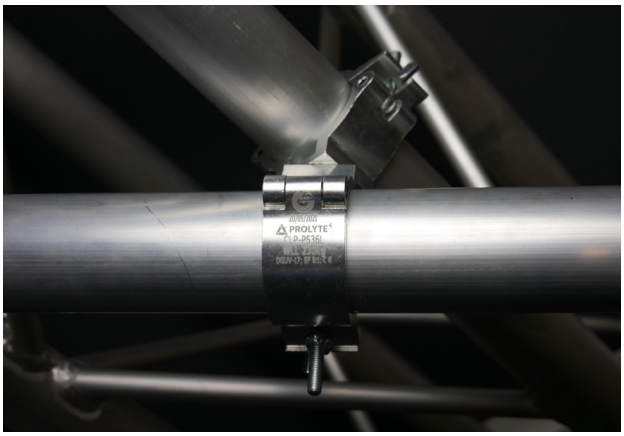

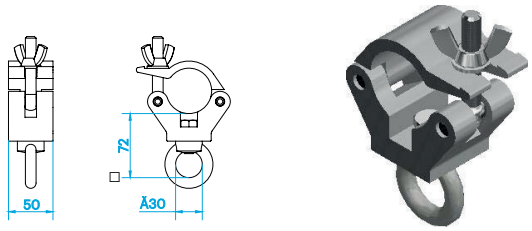

CLP-P537	weight = 0.83 kg
Clamp with eye nut (48-51 mm)	SWL 170 kg (SF 8:1)

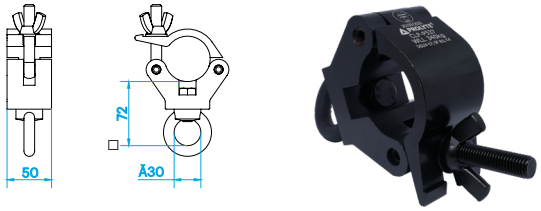

CLP-P537B (Black)	weight = 0.83 kg
Clamp with eye nut (48-51 mm)	SWL 170 kg (SF 8:1)

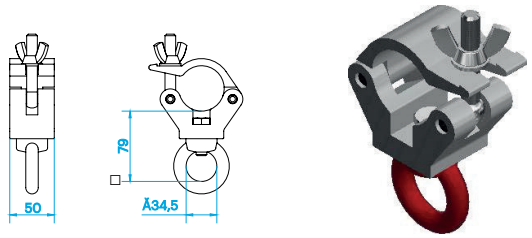

CLP-P538	weight = 0.41 kg
Clamp with eye nut (48-51 mm)	SWL 750 kg (SF 8:1)

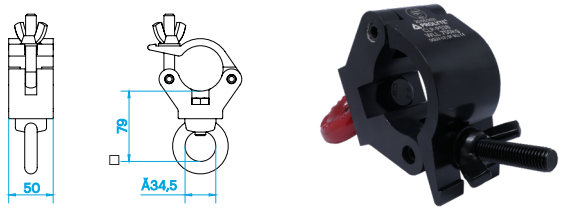

CLP-P538B (Black)	weight = 0.41 kg
Clamp with eye nut (48-51 mm)	SWL 670 kg (SF 8:1)

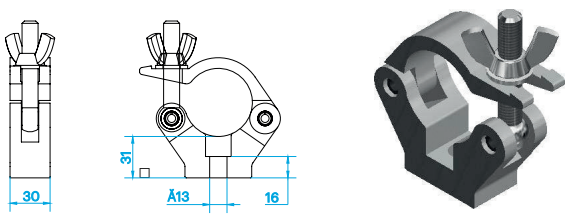

CLP-P545	weight = 0.41 kg
Clamp slim (48-51 mm)	SWL 560 kg (SF 8:1)

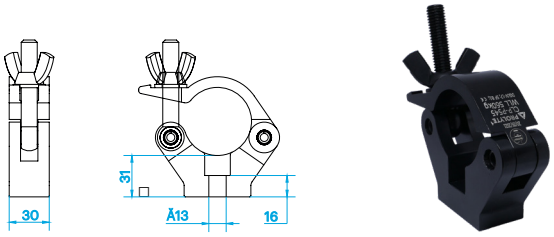

CLP-P545B (Black)	weight = 0.41 kg
Clamp slim (48-51 mm)	SWL 560 kg (SF 8:1)

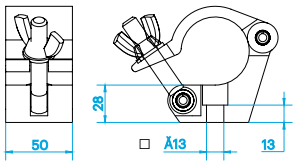

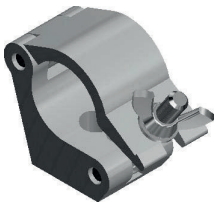

CLP-P587	weight = 0.57 kg
Clamp side entry (48-51 mm)	SWL 780 kg (SF 8:1)

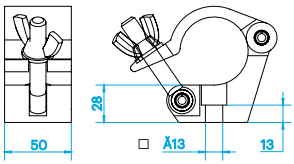

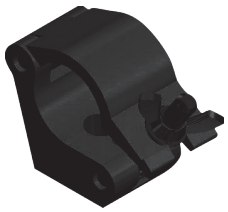

CLP-P587B (Black)	weight = 0.57 kg
Clamp side entry (48-51 mm)	SWL 780 kg (SF 8:1)

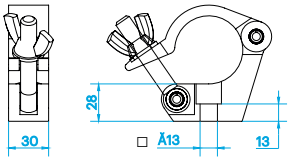

CLP-P588	weight = 0.37 kg
Clamp slim side entry (48-51 mm)	SWL 410 kg (SF 8:1)

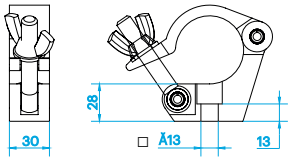

CLP-P588B (Black)	weight = 0.37 kg
Clamp slim side entry (48-51 mm)	SWL 410 kg (SF 8:1)

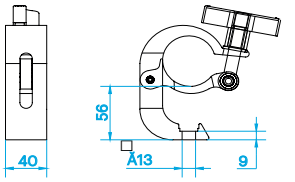

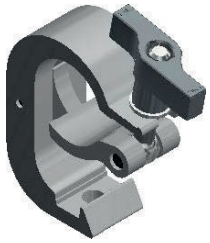

CLP-P589	weight = 0.50 kg
Clamp (48-51 mm)	SWL 350 kg (SF 8:1)

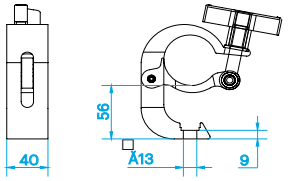

CLP-P589B (Black)	weight = 0.50 kg
Clamp (48-51 mm)	SWL 350 kg (SF 8:1)

The clamps are designed to fit a 60 mm (2 3/8") to 63.5 mm (2 1/2") tubes and are extruded from a high tensile aluminium alloy.

Technical features:

- Compatible with the B100 and C52T Series truss
- Rated with safety factor 8:1 (kg) DGUV17/BGV C1
- Polished surface with laser markings
- Equipped with a M12 Bolt and wingnut
- Black anodized standard available, other colours on request

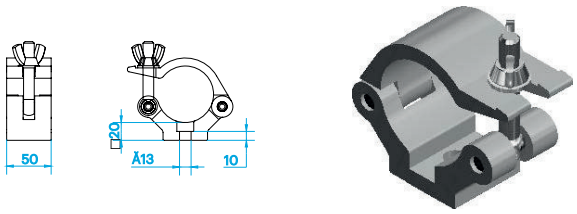

CLP-P635	weight = 0.65 kg
Clamp (60 mm)	SWL 650 kg (SF 8:1)

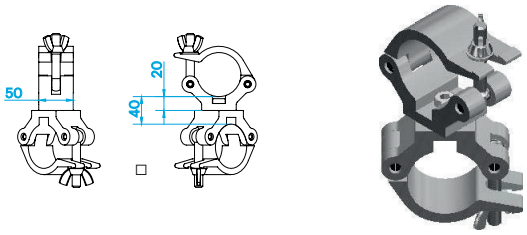

CLP-P636	weight = 1.5 kg
Swivel coupler (60-63.5 mm)	SWL 650 kg (SF 8:1)

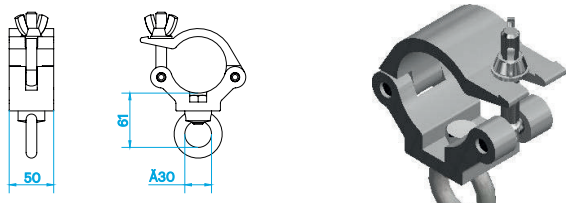

CLP-P637	weight = 1.00 kg
Clamp with eye nut (60mm)	SWL 340 kg (SF 8:1)

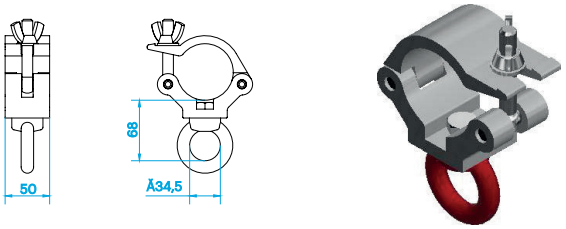

CLP-P638	weight = 1.00 kg
Clamp with eye nut (60mm)	SWL 650 kg (SF 8:1)

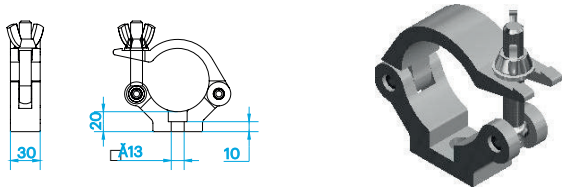

CLP-P645	weight = 1.00 kg
Clamp slim (60-63.5 mm)	SWL 510 kg (SF 8:1)

Photo: Rombouts Showequipment BV, The Netherlands. Project: Love Letters.

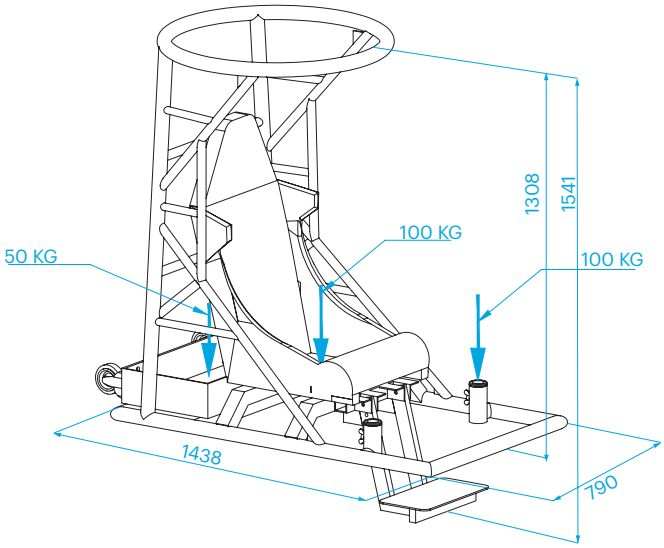

ACC-FSS-1	
Followspot chair	Max. load ballast tray 50 kg Max. load person 100 kg Max. load follow spot 100 kg (only 2011 model)

TRUSS DOLLY

Prolyte now presents a new type of dolly to transport 30-series and H40R trusses. The dolly is made of a combination of lightweight plastic and steel, offering a rigid base to transport a stack of trusses. The dolly is used in combination with the standard truss carrier (ACC-515) and has a special compartment to store 5 of these inside the dolly. The dolly is further equipped with handle bars and special stacking rims to stow away your empty dollies efficiently.

The trusses can be secured in place by fixing the trusses and truss carriers to the dolly, by means of a ratchet strap (ratchet is included).
The relatively small, but stable and robust dolly, has 4 rotatable wheels with brakes. It offers an excellent transport solution for your truss, especially for smaller event locations or venues with limited access.

TRUSS DOLLY SPECIFICATIONS:

- Measurements: 60 x 45 cm
- Height: 18cm
- Capacity: 250kg

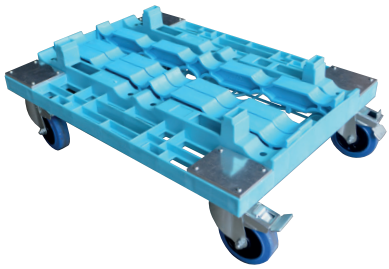

ACC-530
Truss dolly

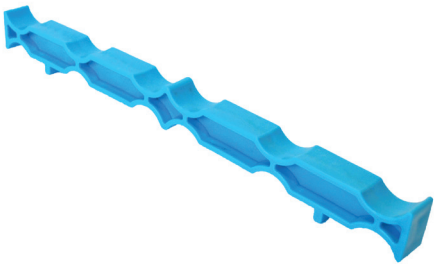

ACC-515
Truss carrier for 30 series truss.

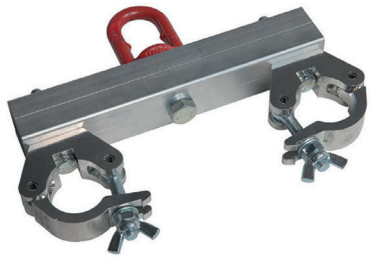

ACC-HB•••-LIFT-1T

Hanging Bracket WLL 1T

Hanging Bracket - Standard available Lengths and Codes	
Truss Type	Code
30D/V	ACC-HB-30D/V-LIFT-1T
40D/V	ACC-HB-40D/V-LIFT-1T
36R	ACC-HB-36R-LIFT-1T
36V	ACC-HB-36V-LIFT-1T
52V	ACC-HB-52V-LIFT-1T

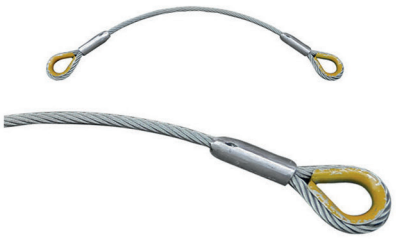

SW-10-••••-EE WLL 1000 kg, 10 mm

SW-14-••••-EE WLL 2000 kg, 14 mm

Steel wire rope

Steel wire - Standard available Lengths and Codes		
Length (CM)	Width (MM)	Code
200	10	SW-10-0200-EE
400	10	SW-10-0400-EE
600	10	SW-10-0600-EE
800	10	SW-10-0800-EE
1000	10	SW-10-1000-EE
200	14	SW-14-0200-EE
400	14	SW-14-0400-EE
600	14	SW-14-0600-EE
800	14	SW-14-0800-EE
1000	14	SW-14-1000-EE

SS-10-•••EE/B WLL 1000 kg, 10 mm

Steel wire rope black

Steel wire - Standard available Lengths and Codes		
Length (CM)	Width (MM)	Code
200	10	SW-10-0200-EE/B
400	10	SW-10-0400-EE/B
600	10	SW-10-0600-EE/B
800	10	SW-10-0800-EE/B
1000	10	SW-10-1000-EE/B

SW-10-•••EE/C WLL 1000 kg, 10 mm

SW-14-•••EE/C WLL 2000 kg, 14 mm

Steel wire rope with cover

Steel wire - Standard available Lengths and Codes		
Length (CM)	Width (MM)	Code
200	10	SW-10-0200-EE/C
400	10	SW-10-0400-EE/C
600	10	SW-10-0600-EE/C
800	10	SW-10-0800-EE/C
1000	10	SW-10-1000-EE/C
200	14	SW-14-0200-EE/C
400	14	SW-14-0400-EE/C
600	14	SW-14-0600-EE/C
800	14	SW-14-0800-EE/C
1000	14	SW-14-1000-EE/C

SS-2T-•••

Softsteel, WLL 2T, Black

Softsteel - Standard available Lengths and Codes

Length (CM)	Code
50	SS-2T-050
100	SS-2T-100
150	SS-2T-150
200	SS-2T-200
300	SS-2T-300

RA-2T-••••HH 2T 50 mm

RA-5T-••••HH 5T 75 mm

Ratchet Set

Rachet set- Standard available Lengths and Codes

Length (CM)	Width (MM)	Code
200	50	RA-2T-0200HH
400	50	RA-2T-0400HH
600	50	RA-2T-0600HH
800	50	RA-2T-0800HH
1100	50	RA-2T-1100HH
1500	50	RA-2T-1500HH
1600	50	RA-2T-1600HH
400	75	RA-5T-0400HH
500	75	RA-5T-0600HH
750	75	RA-5T-0800HH
1100	75	RA-5T-1100HH

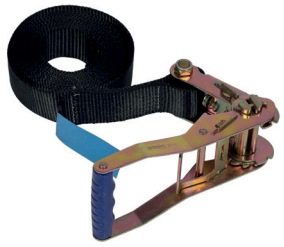

RA-2T-••••OE

Ratchet. Endless. 2T. 50 mm

Rachet - Standard available Lengths and Codes

Length (CM)	Width (MM)	Code
200	50	RA-2T-0200OE
400	50	RA-2T-0400OE
600	50	RA-2T-0600OE
800	50	RA-2T-0800OE

RI-BC-1-70245

Beam Clamp

Rachet clamp - Standard available Lengths and Codes

Code	Description
RI-BC-1-70245	Beam Clamp, 1T, 70-245 mm
RI-BC-2-75230	Beam Clamp, 2T, 75-230 mm
RI-BC-3-80322	Beam Clamp, 3T, 80-322 mm
RI-BC-5-90320	Beam Clamp, 5T, 90-320 mm

CH-07-••••-CHH

Chain, Clutch + Hook

Length 150/200 mm, WLL 1,5 ton

CH-10-••••-CHH

Chain, Clutch + Hook

Length 150/200 mm, WLL 3 ton

CH-07-200HCSH

Chain, Clutch + Hook + Spanner

Length 200 mm, WLL 1,5 ton

CH-10-200HCSH

Chain, Clutch + Hook + Spanner

Length 200 mm, WLL 3 ton

CH-07-••••-CRH

Chain, Clutch + Hook + Ring

Length 150/200 mm, WLL 1,5 ton

CH-10-••••-CRH

Chain, Clutch + Hook + Ring

Length 150/200 mm, WLL 3 ton

CH-10-450CRR

Chain, Clutch + Ring

WLL 3T ton Length = 450

RI-SH3.2T

Shackle 3.2T With bolt, nut and pin

Also available in 4.7T

RI-SH3.2T-EB

Shackle 3.2T With bolt

Also available in 4.7T

RI-O-RING-1T

Top Ring Topschalm, WLL 1T

RI-O-RING-5T

Top Ring Topschalm, WLL 5T

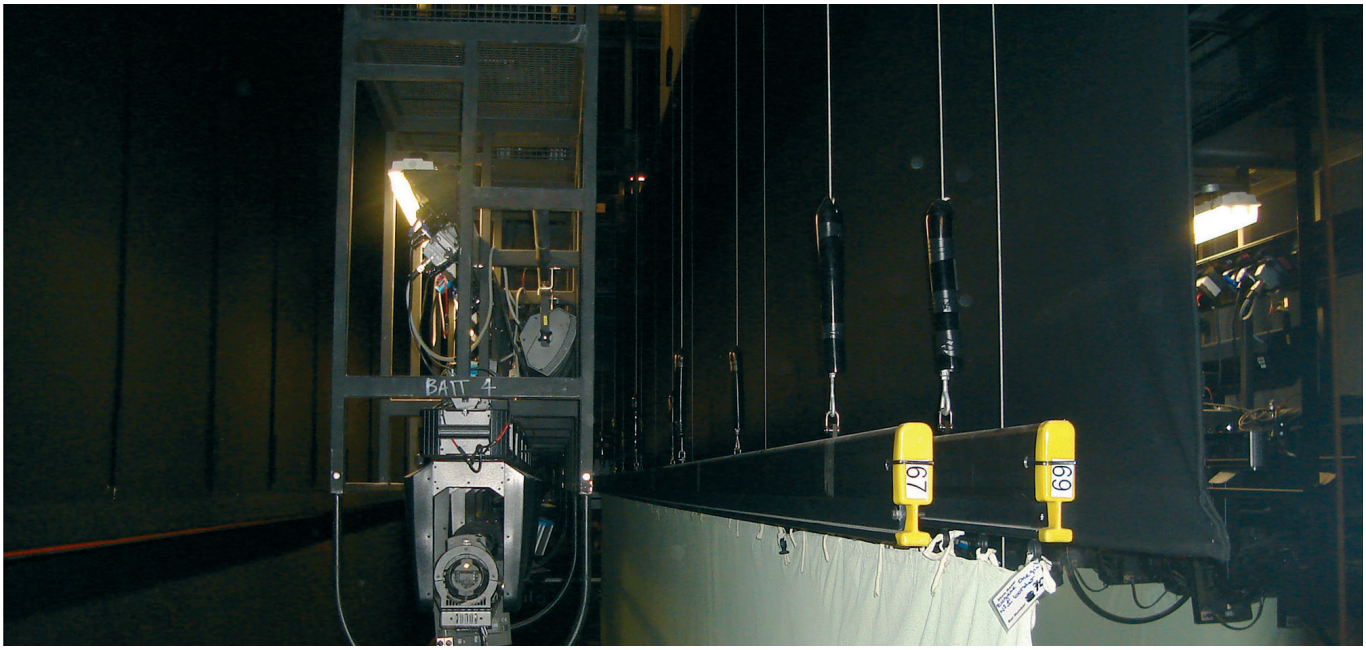

Photo: Royal Opera House, London, UK

READY FOR THE FUTURE

The rapid evolution of contemporary theater productions has placed new demands on existing fly-bar systems. Important recent developments include higher loading requirements, a growth in the scope of productions, and the introduction of mechanically operated fly-bar systems. The demands placed by new production techniques have made many fly-bar systems no longer suitable for the job.
Developed to fill this gap, ProTrac is a substantially upgraded fly-bar system with several extra options and a high loading capacity. Additionally, because ProTrac is a lightweight system (low inherent weight), it allows a higher net loading capacity for your winches or drives.

ACCIDENTS AVOIDED

Compared to commonly used conventional fly-bars or steel ladder beams, ProTrac dramatically reduces the horizontal bending that results from applying loads to the fly-bar. ProTrac has practically NO lateral flex: horizontal bending is less than 2 cm over 24 m of length when full load is applied. Nearby fly-bars will not be blocked and, more importantly, potential accidents due to the blocking of the flyway can be prevented. Further, ProTrac can be furnished with yellow end-caps to enhance visibility of the fly-bar, thus providing an extra safety margin for technicians and actors when working on stage.

EASY INSTALLATION

The ProTrac system is very flexible, allowing components of several different lengths to be easily combined and connected. ProTrac can replace conventional fly-bars in theatres or other venues without any alteration of the existing installation. There is no need to make adjustments to the suspension cables or the complete fly-bar system: the steel wires of the existing system can simply be connected to the adjustable suspension points of the ProTrac components. Calculation methods used for ProTrac comply with DIN 56921.

SYSTEM DESCRIPTION

ProTrac consists of a rectangular upper profile of extruded aluminium combined with a lower round aluminium tube or profile. Three types of lower profile can be connected to the upper profile:

1. Tube with slot profile 48,3 mm
2. Tube with slot profile 48,3 mm
   with integrated rail fiting for Helm 100 runner
3. Tube with slot profile 60 mm
   with integrated rail fiting for Helm 100 runner

The lower profile connects to the upper profile with stud bolts. Suspension points for the ProTrac components slide into the slot of the upper profile and are easily fixed, due to a lock and load system. ProTrac is a modular system. ProTrac is a modular system. Variable lengths can be connected via internal tubes, which are bolted into place. The connection of two lower profiles is placed under 45 degrees to guarantee flawless runner travel. ProTrac's profiles are black anodised and are furnished with rubber caps at the ends. The upper profile can be fitted with extra drilled holes of 50 mm (spaced 500 mm) to provide fittings for integrated electrical sockets.

ADVANTAGRD

- High loading capacity. Max. Point load of 350 kg on 4,5 m span possible.
- High Safety Factor: ProTrac has a Safety factor of 5 (on permanent deformation) and 10 (on failure).
- Reduced horizontal bending. The lateral flex is less than 2 cm over 24 m length if full load is applied, nearby fly-bars will not be blocked.
- Very low inherent weight: ProTrac is 20 to 25% lighter than steel ladder beams, which offers extra load capacity for your scenery.
- Modular and flexible: ProTrac can be used in all theatres or other venues, without any adjustments or changes to the structural components.
- Compact build height: ProTrac has a build height of only 306 mm.
- Black stays black: ProTrac is anodised black.
- Enhanced safety; End-caps available in several colours.

DO

- Only use pre-tensioned steel wires for the suspension of fly-bars
- Check the actual load on the fly-bar before the first movement
- Check the suspension of the load to the fly-bar before the first movement
- Make sure the fly path of loads or set pieces is not blocked
- Make sure you use the right type of sheave for your steel wires

DO NOT

- Only use tested and certified hardware
- Keep a written logbook
- Exceed the maximum allowable load given cantilever the ProTrac more as stated in the structural report
- Use damaged parts or suspension equipment

Front view

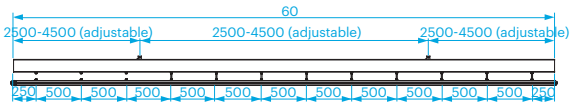

Connector view

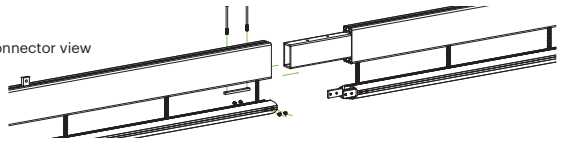

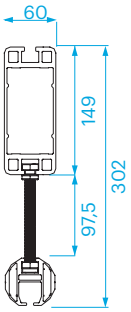

Example:
Winch / Hoist capacity 750 kg.
Length of ProTrac = 24 m.
Self weight ProTrac = 216 kg.
Free loading capacity =
750 kg - 216 kg = 534 kg.
Point loads: 2 x point loads of 267 kg.
Max. Uniformly distributed load =
534/24 = 22,3 kg/m1.

- The given allowable loading is for the complete ProTrac system, and is equal for 48,3 mm or 60 mm lower tube.
- The allowable loading is given for the ProTrac only. In a complete system winch capacity and total length also have to be taken in account.
- The total weight of 2 point loads in 2 adjacent fields should not exceed the maximum allowable capacity of the suspension cable points.

TECHNICAL SPECIFICATIONS PROTRAC

TYPES	UPPER PROFILE	LOWER PROFILE 48,3 mm (1)	LOWER PROFILE 48,3 mm + HELM 100 (2)	LOWER PROFILE 60 mm + HELM 100 (3)
Alloy	EN AW 6082 T6 F28	EN AW 6082 T6 F31	EN AW 6005 F26	EN AW 6005 F26
Profiles	60 diam.	48,3 mm.	48,3 mm.	60 mm.
Coupling system	bolts	bolts	bolts	bolts
Self weight	6,088 kg/m	1,944 kg/m	1,921 kg/m	2,534 kg/m
Ix in mm^4	6581770	133896	116630	222400
Wx in mm^3	90437	5760	4160	7963
Iy in mm^4	1074310	145635	160570	289000
Wy in mm^3	36575	6350	6648	9999

MAXIMUM DYNAMIC LOADS

SPAN		DISTRIBUTED Load		MAXIMUM ALLOWABLE POINT LOADS							
m	ft	kg/m	lbs/ft	kg	lbs	kg	lbs	kg	lbs	kg	lbs
2,5	8,2	462,3	311,1	577,9	1275,4	433,4	956,6	288,9	637,7	239,8	529,3
2,7	8,9	396,1	266,5	534,7	1180,0	401,0	885,0	267,3	590,0	221,9	489,7
2,9	9,5	343,0	230,8	497,4	1097,7	373,0	823,3	248,7	548,9	206,4	455,6
3,1	10,2	299,9	201,8	464,9	1026,0	348,7	769,5	232,4	513,0	192,9	425,8
3,3	10,8	264,4	177,9	436,3	962,9	327,2	722,2	218,1	481,4	181,1	399,6
3,5	11,5	234,8	158,0	410,9	907,0	308,2	680,2	205,5	453,5	170,5	376,4
3,7	12,1	209,9	141,2	388,3	857,0	291,2	642,8	194,2	428,5	161,2	355,7
3,9	12,8	188,7	127,0	368,0	812,1	276,0	609,1	184,0	406,1	152,7	337,0
4,1	13,4	170,5	114,8	349,6	771,6	262,2	578,7	174,8	385,8	145,1	320,2
4,3	14,1	154,9	104,2	332,9	734,8	249,7	551,1	166,5	367,4	138,2	304,9
4,5	14,8	141,2	95,0	317,7	701,2	238,3	525,9	158,9	350,6	131,9	291,0

Fig 1. Slide in lock and load block in upper profile.

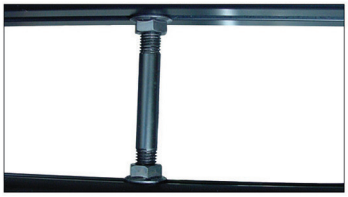

Fig 2. Connection of upper to lower profile by means of stud bolts which are fastened with a self locking nut.

Fig 3. The 60 mm lower profile with integrated rail profile fit for Helm 100 runners for 48H & 60H.

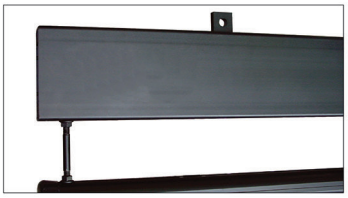

Fig 4. A completely assembled section of ProTrac.

Photo: Prolyte

System characteristics

Prolyte tower systems consist of four types of rigging towers and the MPT, ST, CT and DT ground support systems. All tower systems are based on standard Prolyte truss. Extending your inventory to encompass more complex systems (like towers or roofs) is a cost-efficient process, proceeding as a step-by-step investment. You only need to buy the additional parts, such as base or top sections. This approach offers extraordinary flexibility and facilitates optimum use of your existing trusses.

Rigging towers

The rigging towers are designed as stand-alone towers to support PA clusters or audience lighting. Rigging towers are available in types ranging from 800 to 1800 kg in terms of allowable load, and from 7,60 m to 16 m in terms of lifting height. Rigging towers can be built on any even surface and are specially designed for outdoor use.

Ground support towers

The ground support towers are designed to support a grid without having the need for suspension points. They can be used in a goal post setup (two towers) or as ground support (three or more towers). The ground support towers are available in four types: the MPT Tower (to be used in combination with all trusses from the Multipurpose Series), the ST tower (to be used in combination with all the trusses from the Heavy-Duty Series), the CT tower (to be used in combination with the B100RV/S100F and BGR70 truss) and the DT tower to be used in combination with the mammoth truss. Ground support towers can be built on any even surface and are designed for indoor as well as outdoor use.

Coupling system

The RT-H30V, MPT and ST mast sections use the CCS6 system. The RT-36V, RT S52SV, RT- B100RV and CT mast section use the CCS7 system. The Conical Coupling System allows fast, efficient and reliable coupling of your towers.

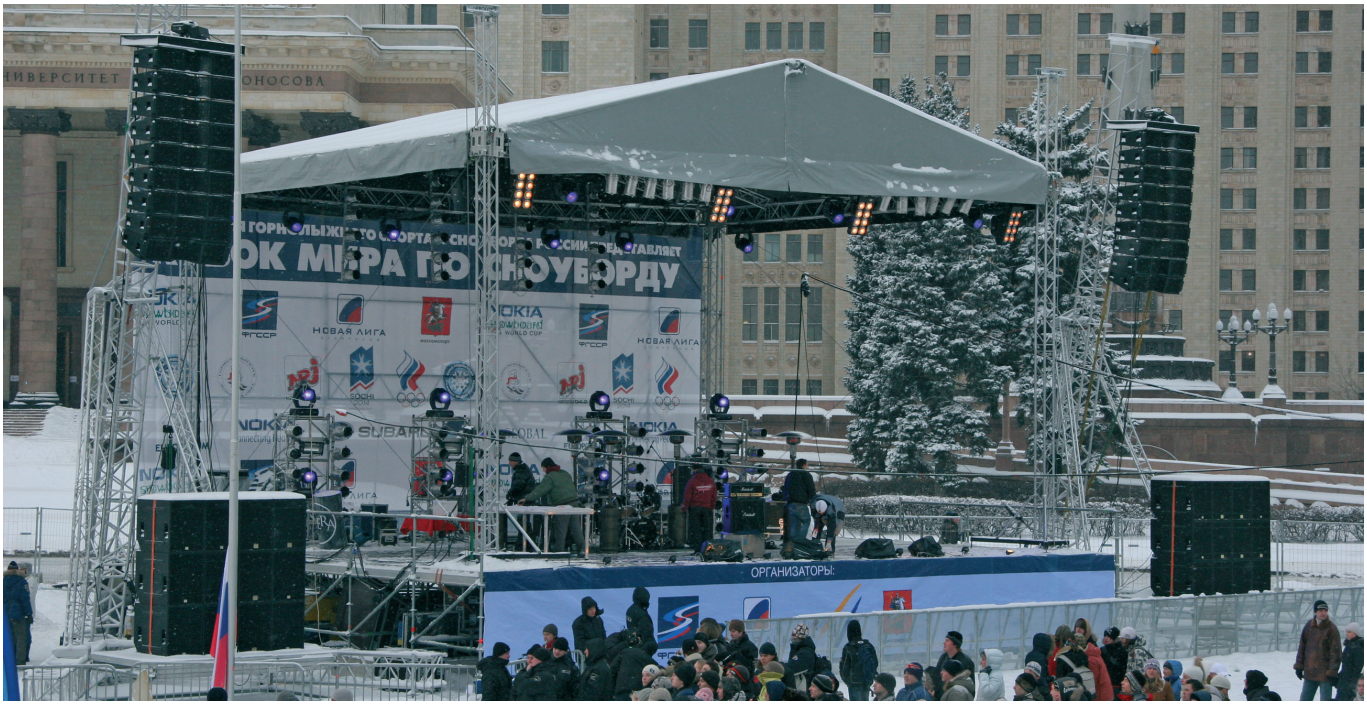

Photo: ModifiC, Russian Federation. Project: RT Sound -Nokia Snowboard.

The light-duty RT-H30V has a loading capacity of 800 kg and a maximum lifting height of 7,60 m. The RT H30V is based on H30V truss with stabilisers of 60 mm tube. It has a self-weight of 260 kg. The legs of the V-shaped base can be levelled by means of screw jacks, which are attached to the side of the legs.

After the base is placed, the mast can be build and erected using the hinges on the base corner. The mast should be stabilised by means of the braces, which fix to the legs. After the system is levelled and ballast is applied, the load can be hoisted in position. Its relatively small dimensions make it suitable for a range of applications, including outdoor events, concerts, shopping malls, halls, exhibition areas and theme parks.

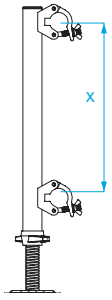

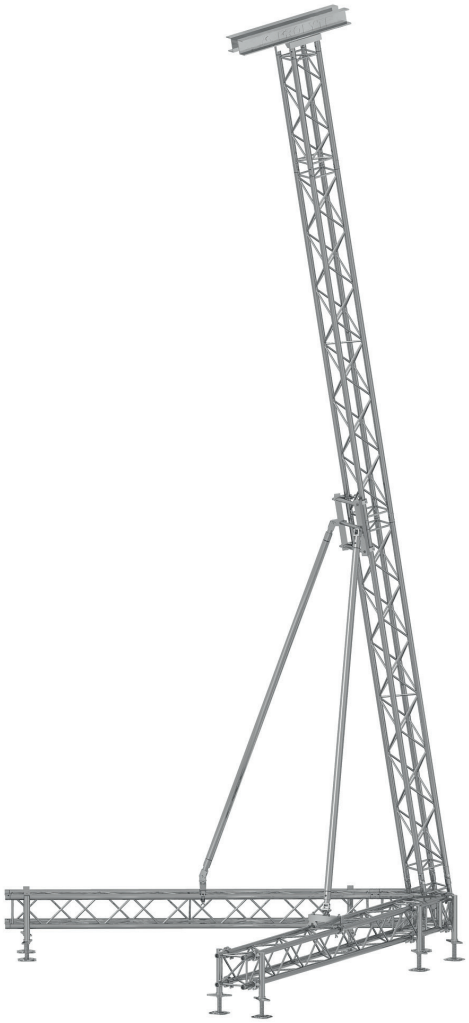

ACC-SPIN-ATT-30

Spindle attachment 30 truss, x = 239 mm.

ACC-SPIN-LAY/40

Spindle to be ordered separately.

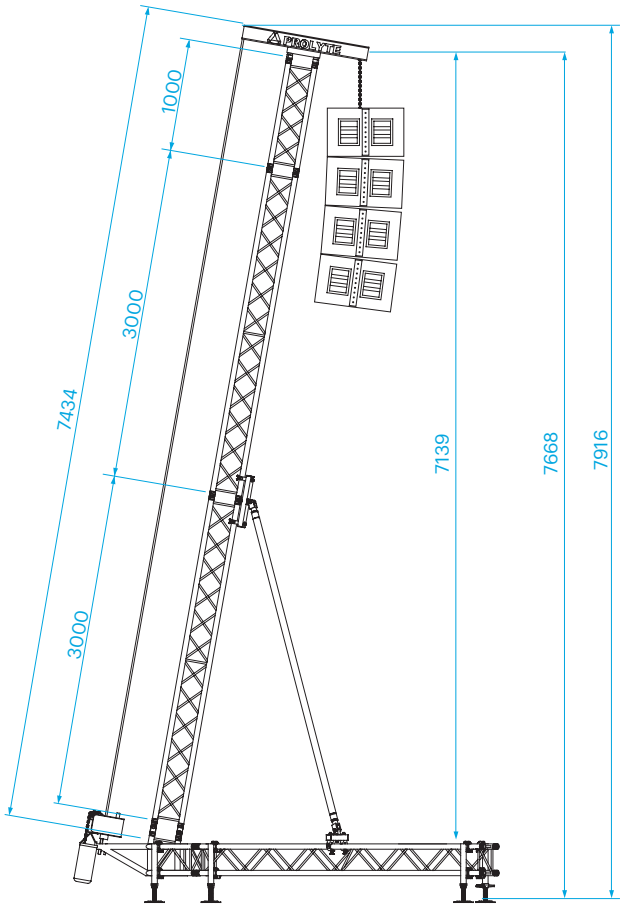

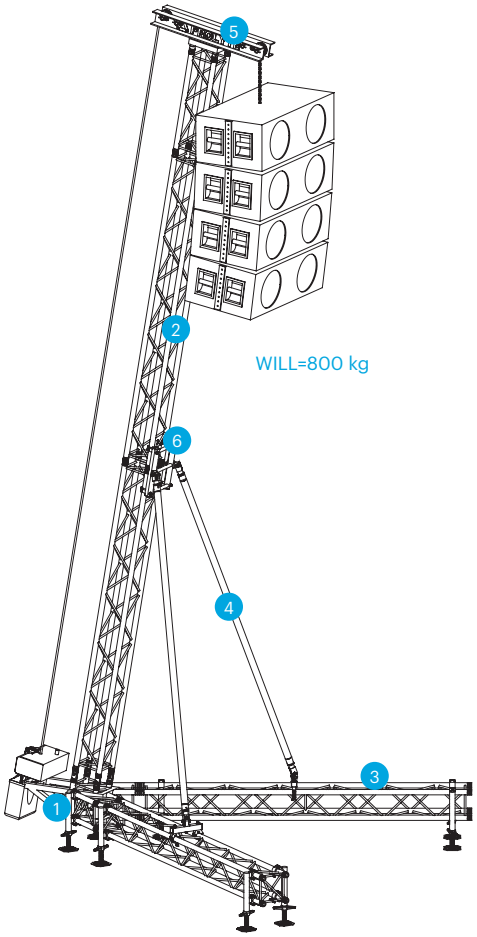

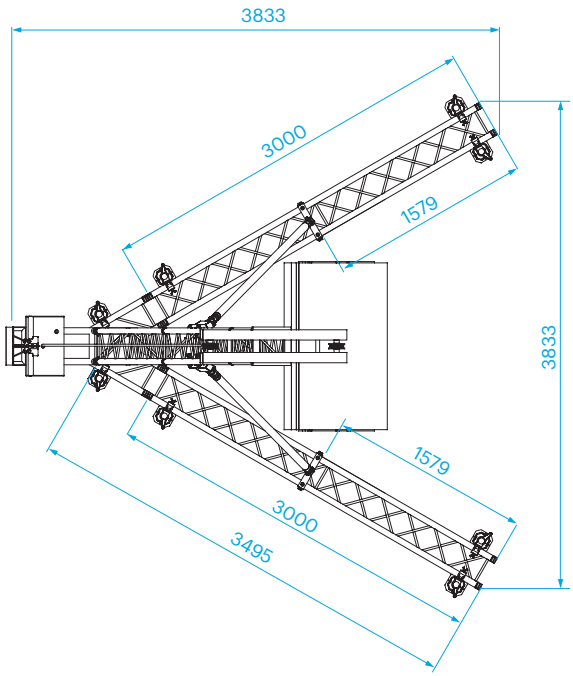

Legend	
1 CORNER	RT-H30V-C003
2 MAST SECTION	H30V-L•••
3 LEG SECTION	H30V-L•••
4 STABILISER SECTION	TUBE 60 MM
5 TOP SECTION	RT-009H
6 MAST ATTACHMENT	RT-STAB-H30V-TOP

Technical specifications - RT-H30V-0,8T	
max. overall height	7,92 m (other heights optional)
max. lifting height	7,60 m
max. loading capacity	800 kg (1760 lbs)
max. surface load front	2,5 m²
max. surface load side	1,2 m²
truss sections	H30V
stabiliser	60 mm
coupling system	CCS6 series
alloy alu parts	EN - AW 6082 T6
min ballast	250 kg
max ballast	500kg
max. windspeed	20,7 m/s (46.3 mph)
system weight	260 kg

Structural specifications available.

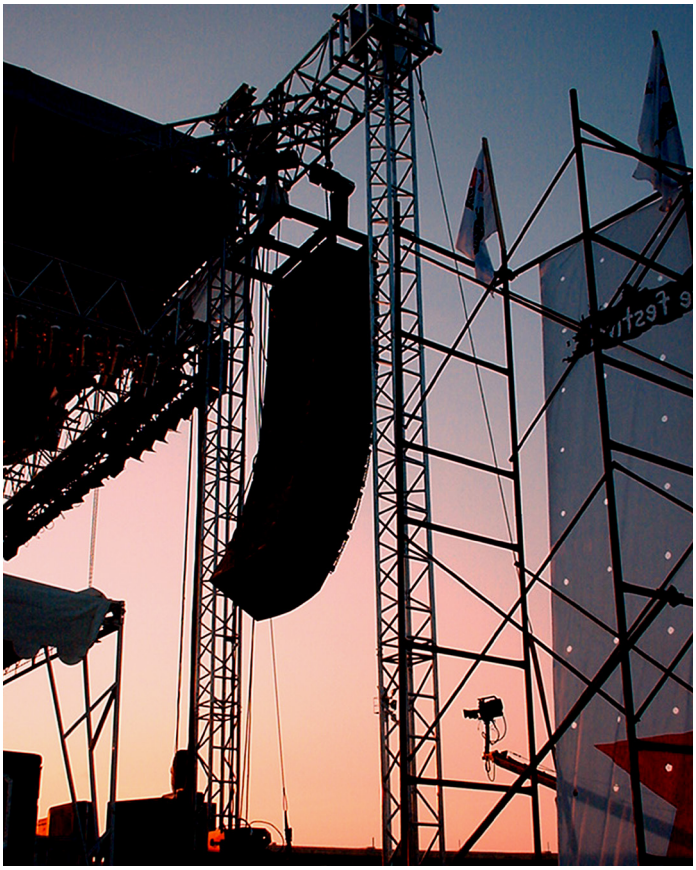

The medium-duty RT-S36V has a loading capacity of 1000 kg and a maximum lifting height of 9,25 m.
The RT S36V is based on S36V truss with stabilisers of 60 mm tube. It has a self-weight of 415 kg. The legs of the V-shaped base can be levelled by means of screw jacks, which are attached to the side of the legs. After the base is placed, the mast can be built and erected using the hinges on the base corner. The mast should be stabilised by means of the braces, which fix to the legs. After the system is levelled and ballast is applied, the load can be hoisted in position. The relatively compact dimensions make it suitable for a range of applications, including outdoor events, concerts, shopping malls, halls, exhibition areas and theme parks.

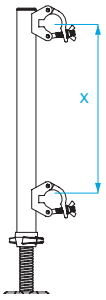

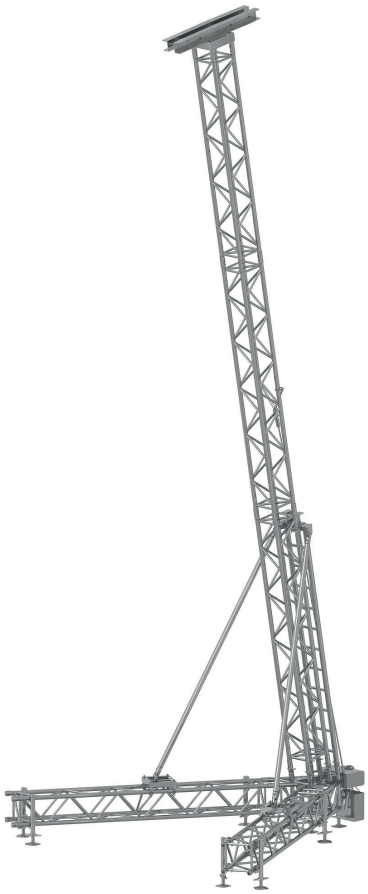

ACC-SPIN-ATT-36
Spindle attachment 36 truss, x = 299 mm.

ACC-SPIN-LAY/40
Spindle to be ordered separately.

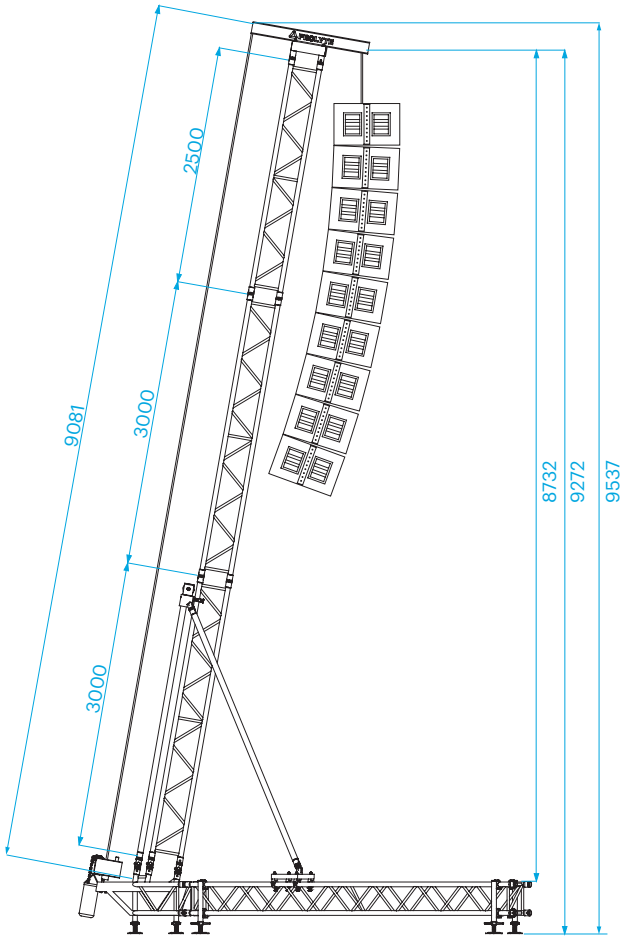

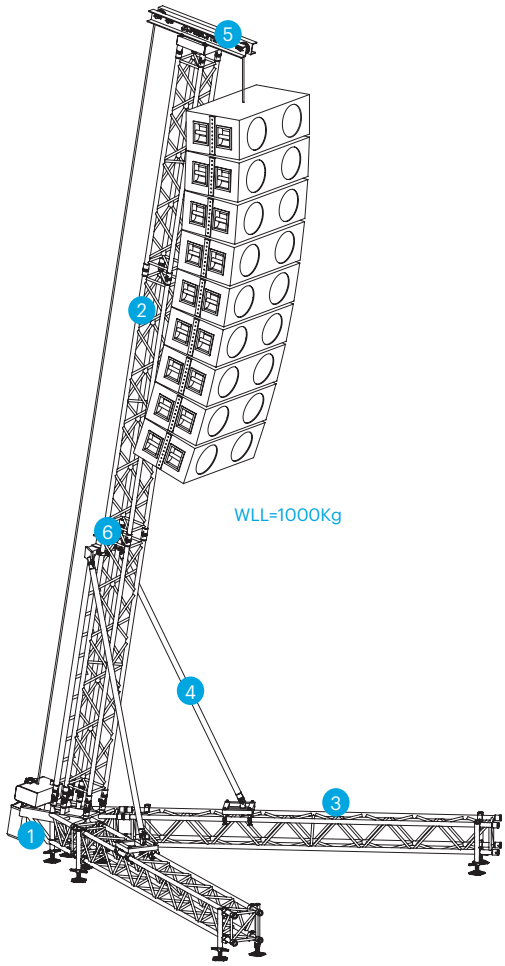

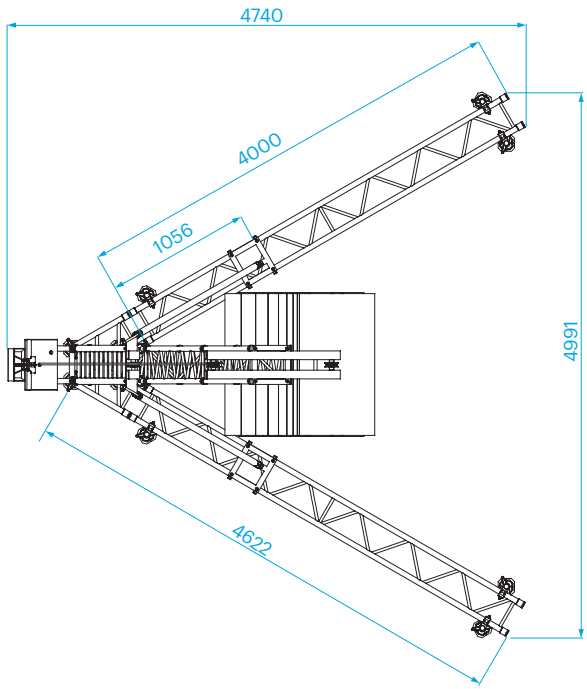

Legend		
1	CORNER	RT-S36V-C003
2	MAST SECTION	36V-L300
3	LEG SECTION	S36V-L400
4	STABILISER SECTION	TUBE 60 MM
5	TOP SECTION	RT-009-S36V
6	MAST ATTACHMENT	RT-STAB-S36V-REAR

Technical specifications - RT-S36V-1T	
max. overall height	9.46 m (other heights optional)
max. lifting height	9.25 m
max. loading capacity	1000 kg (2200 lbs)
max. surface load front	5 m^2
max. surface load side	2,5 m^2
truss sections	S36V
stabiliser	60 mm
coupling system	CCS7 series
alloy alu parts	EN - AW 6082 T6
ballast	480 kg
max. windspeed	20,7 m/s (46.3 mph)
system weight	415 kg

Structural specifications available

Photo: Prolyte, The Netherlands.

The medium-to-heavy-duty RT-S52SV has a loading capacity of 1000 to 1400 kg and a maximum lifting height of 12,95 m (please refer to the technical specifications table for further details). The RT-S52SV is based on S52SV truss with stabilisers of H30D truss. It has a self-weight of 520 kg. The legs of the V-shaped base can be levelled by means of screw jacks, which are attached to the side of the legs. After the base is placed, the mast can be built and erected using the hinges on the base corner. The mast should be stabilised by means of the braces, which fix to the legs. After the system is levelled and ballast is applied, the load can be hoisted into position.
The RT-S52SV rigging tower is the ideal solution for medium to large scale events where flexibility counts, including festivals, concerts, or other major public events. The RT-S52SV can be converted from one type to another by simply adjusting the length of the mast.

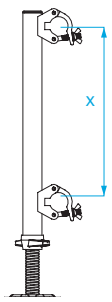

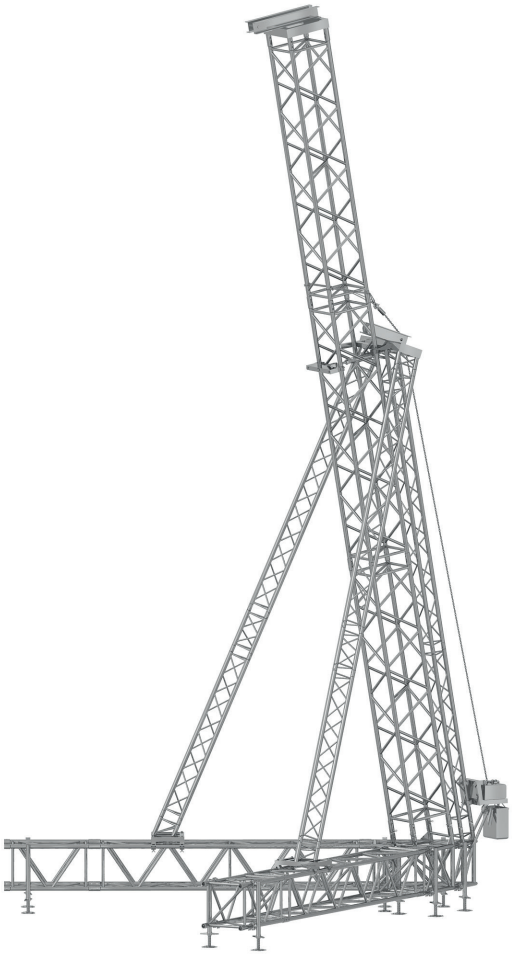

ACC-SPIN-ATT-52
Spindle attachment 52 truss, x = 470 mm.

ACC-SPIN-LAY/60
Spindle length 600mm

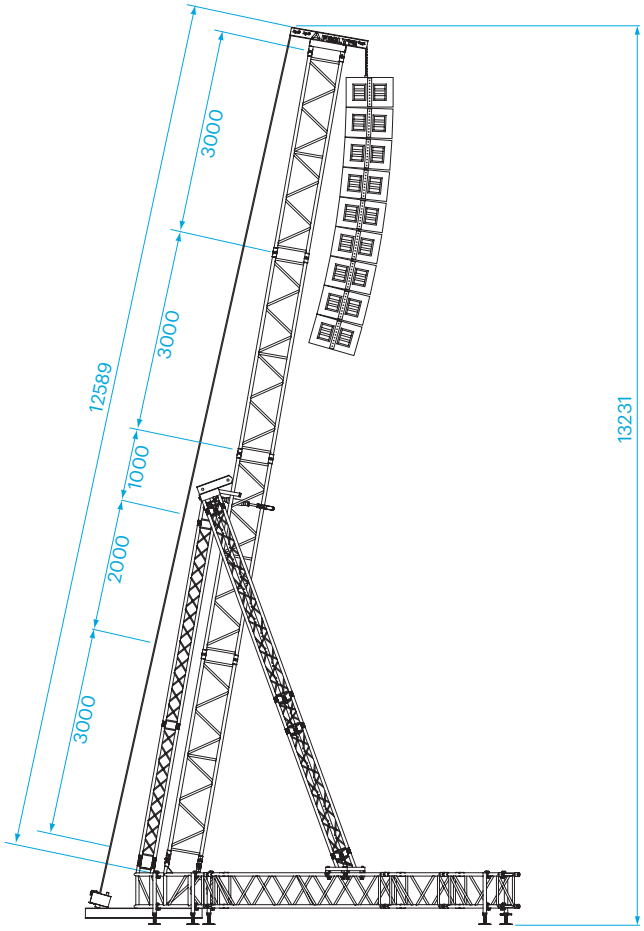

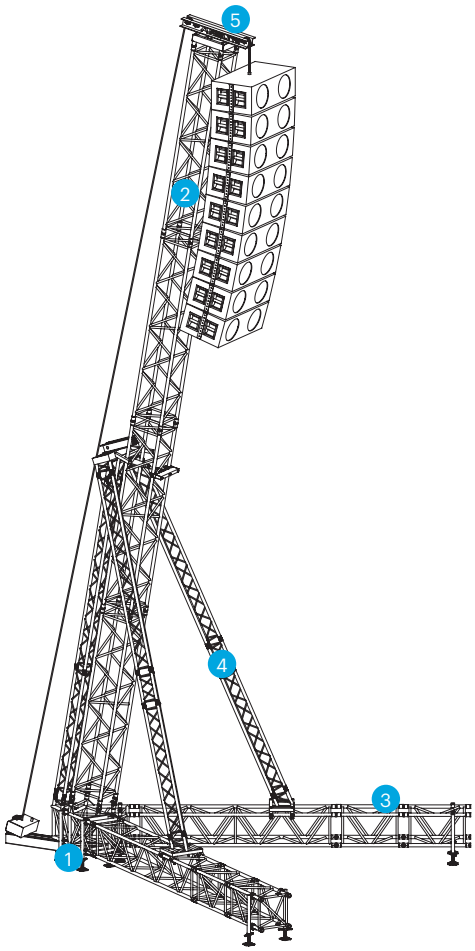

Legend		
1	CORNER	RT-S52SV-C003
2	MAST SECTION	S52SV-L300
3	LEG SECTION	S52SV-L300
4	STABILISER SECTION	H30D-L•••
5	TOP SECTION	RT-009S

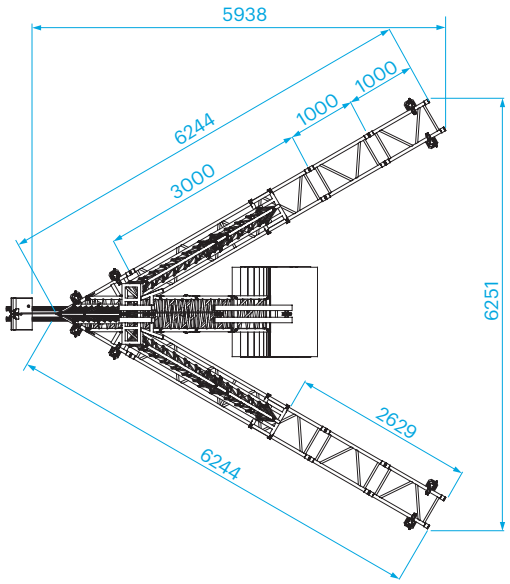

Technical specifications - RT-S52SV-1,0T / RT-S52SV-1,4T		
	RT-S52SV-1T	RT-S52SV-1,4T
max. overall height	13,27 m	11,30 m
max. lifting height	12,95 m	10,95 m
max. loading capacity	1000 kg (2200 lbs)	1400 kg (3080 lbs)
max. surface front load	4 m^2	4 m^2
max. surface side load	2 m^2	2 m^2
truss sections	S52SV	S52SV
stabiliser	H30D	H30D
coupling system	CCS7 series	CCS7 series
alloy alu parts	EN - AW 6082 T6	EN - AW 6082 T6
min. ballast*	650 kg per leg	600 kg per leg
max. windspeed	20,7 m/s (46.3 mph)	20,7 m/s (46.3 mph)
system weight	520 kg (1144 lbs)	495 kg (1089 lbs)

*Ballast values when full pay load is applied.

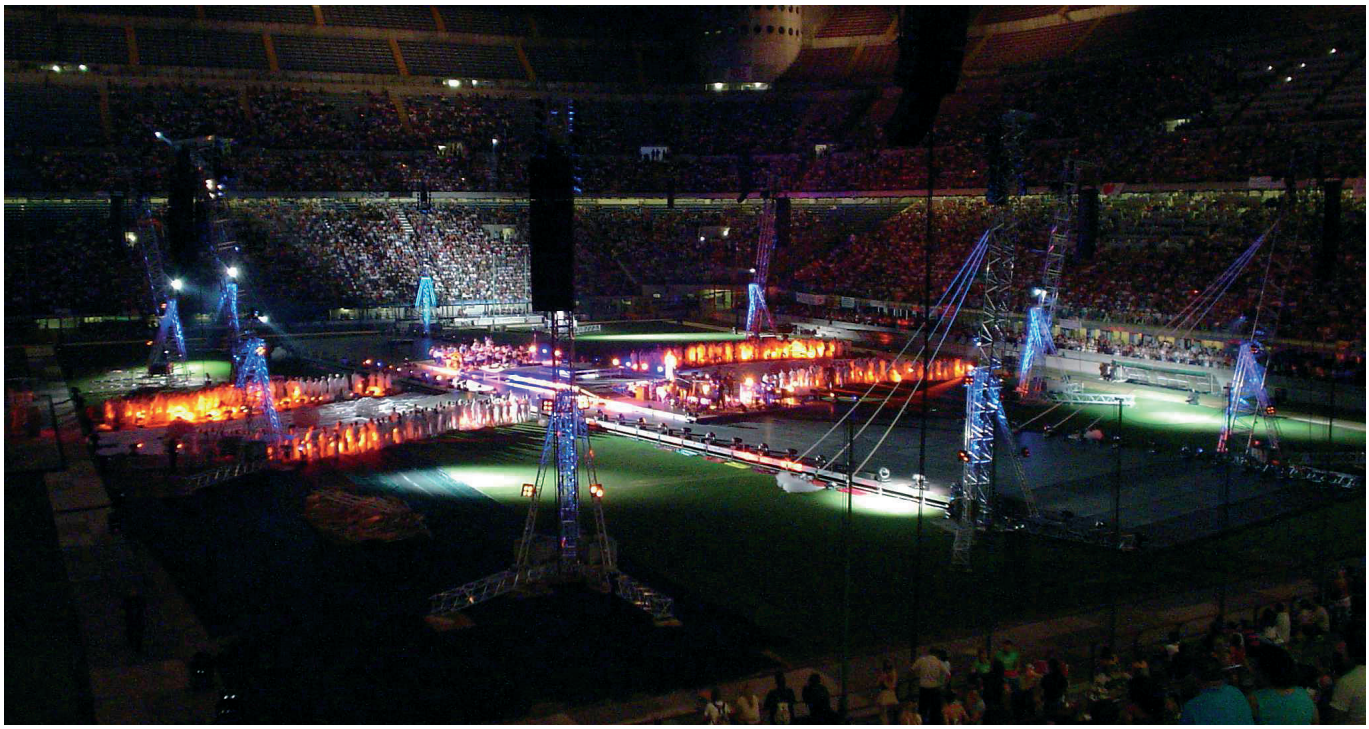

Photo: Italstage, Italy.

The heavy-duty RT-B100RV has a loading capacity of 1800 kg and a maximum lifting height of 15,95 m. The RT-B100RV is based on B100RV truss with stabilisers of H30D truss. It has a self-weight of 695 kg. The legs of the V-shaped base can be levelled by means of screw jacks, which are attached to the side of the legs. After the base is placed, the mast can be built and erected using the hinges on the base. The mast should be stabilised by means of the braces, which fix to the legs. After the system is levelled and ballast is applied, the load can be hoisted in position.
The sturdy and stable RT-B100RV rigging tower is a safe and suitable solution for all sorts of settings, like outdoor events, major public gatherings, and large stadiums.

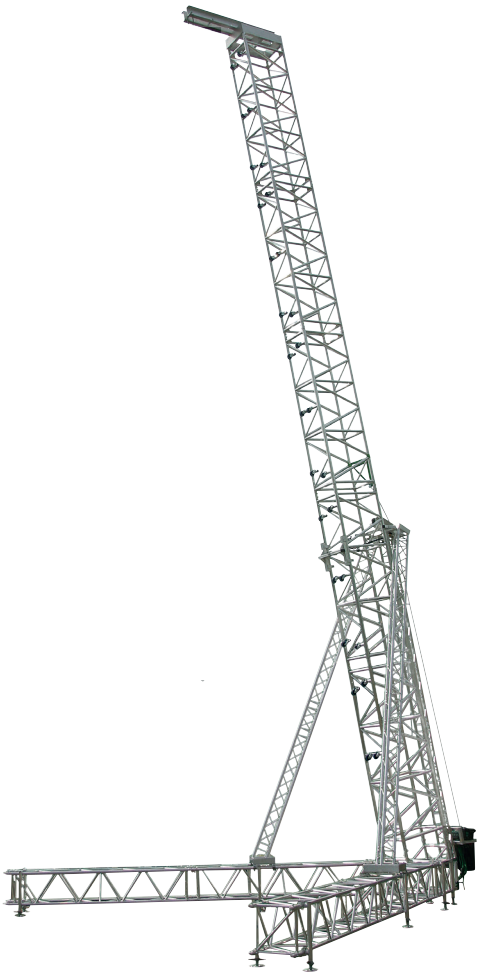

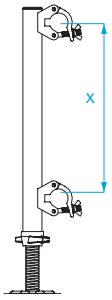

ACC-SPIN-ATT-52
Spindle attachment 52 truss, x = 470 mm.

ACC-SPIN-LAY/60
Spindle to be ordered separately.

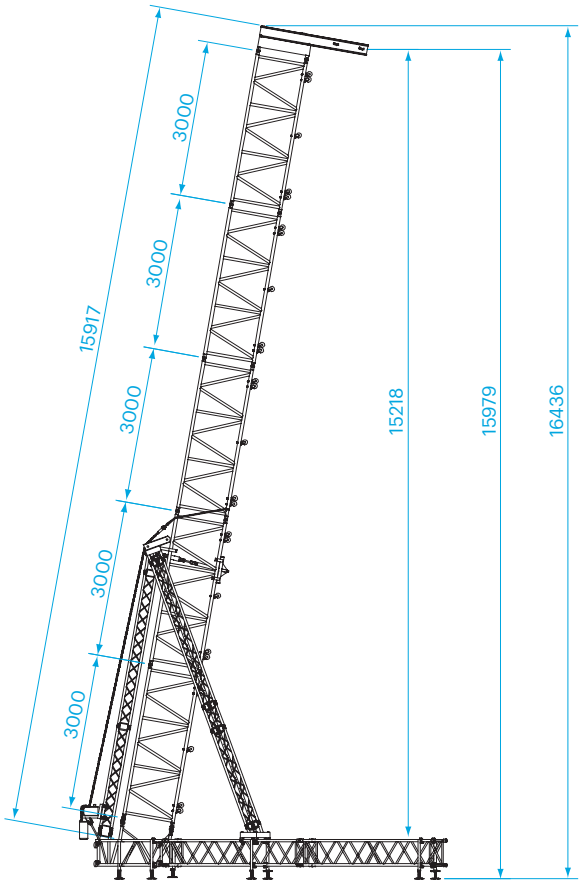

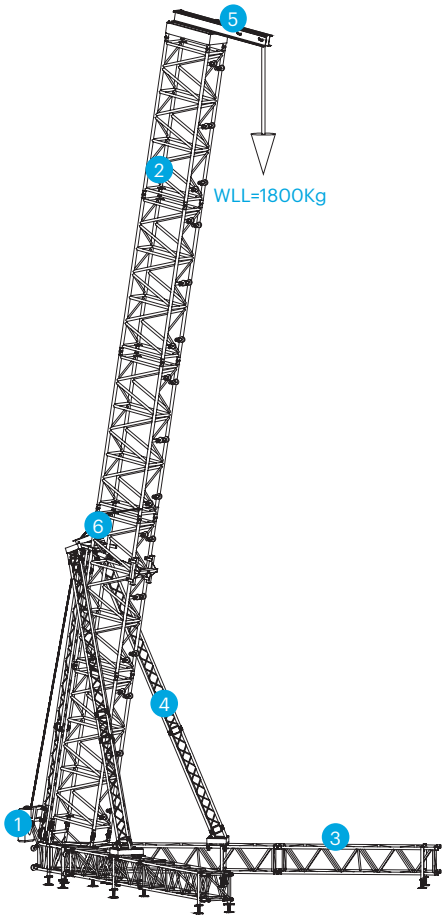

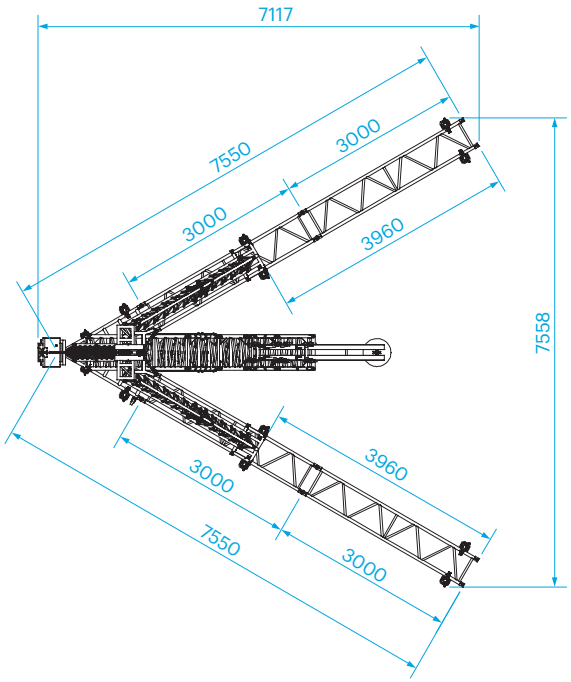

Legend		
1	CORNER	RT-B100RV-C003
2	MAST SECTION	B100RV-L300
3	LEG SECTION	S52SV-L•••
4	STABILISER SECTION	H30D-L•••
5	TOP SECTION	RT-009-B100RV
6	MAST ATTACHMENT	RT-TOP

Technical specifications - RT-B100RV - 2,3T	
max. overall height	16,43 m
max. lifting height	15,95 m
max. loading capacity	1800 kg (3960 lbs)
max. surface load front	5 m^2
max. surface load side	2,5 m^2
truss sections	B100RV / S52SV
stabiliser	H30D
coupling system	CCS7 series / CCS6 series
alloy alu parts	EN - AW 6082 T6
ballast backside	2 x 2000 kg
ballest and outriggers	2 x 1100 kg
max. windspeed	20,7 m/s (46.3 mph)
system weight	695 kg (1530 lbs)

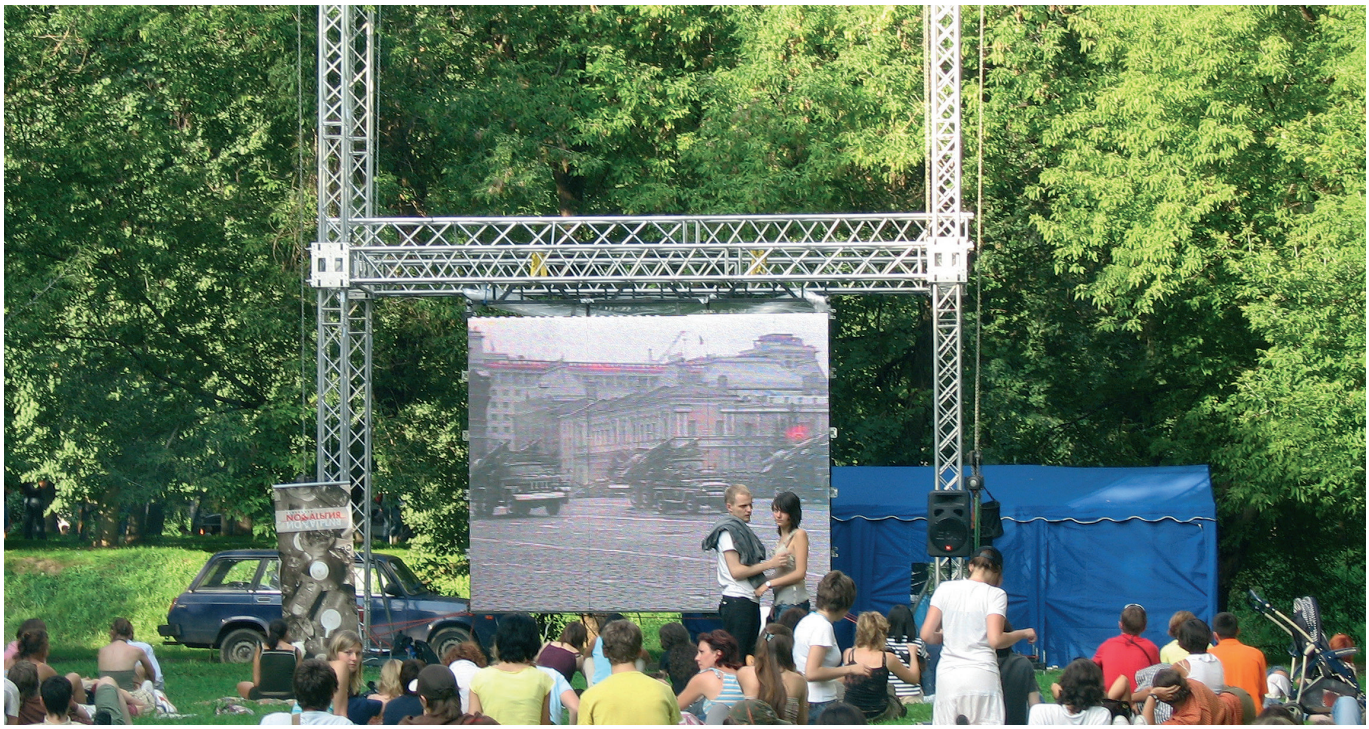

Photo: JSA, Russian Federation.

The MPT tower is based on H30V truss and employs a sleeve block that fits to any of the 30 or 40 Series trusses on all four sides by means of bolted CCS6 couplers (either male or female). In combination with an adapter plate, it is also possible to use the sleeve module with either S36R or S36V truss. The MPT tower has a self-weight of 115 kg.
The MPT sleeve block is a fully bolted structural element, making it much stronger and more precise than conventional welded versions. The top section and base section can facilitate the use of either a hand winch or a chain hoist.
The MPT tower is a cost-effective investment. You need only purchase the special parts if you wish to expand your truss system with towers.

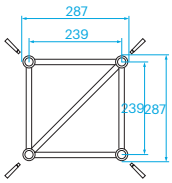

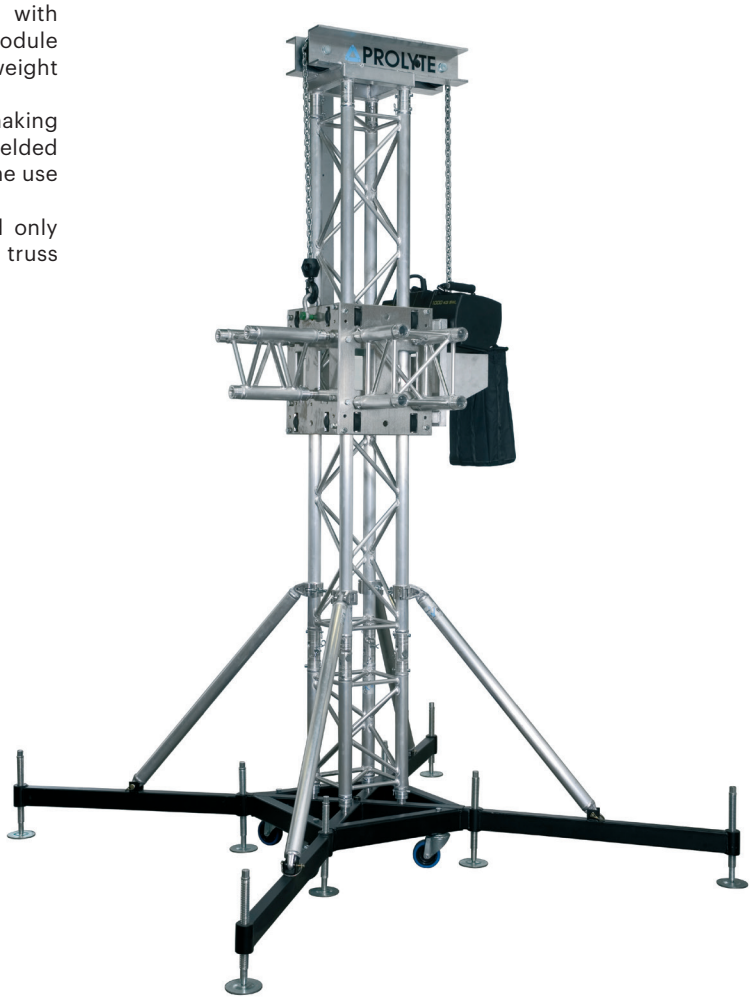

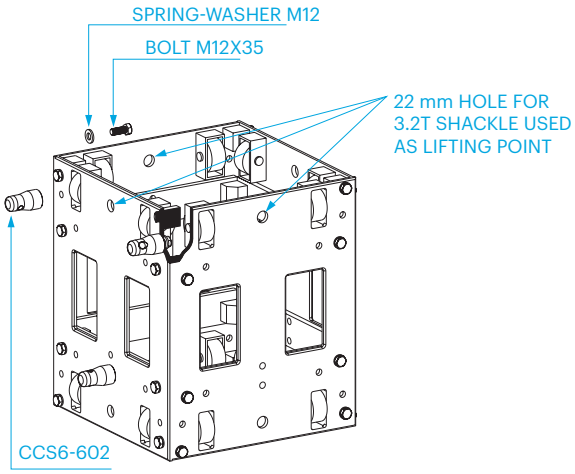

MPT-010
Sleeve module

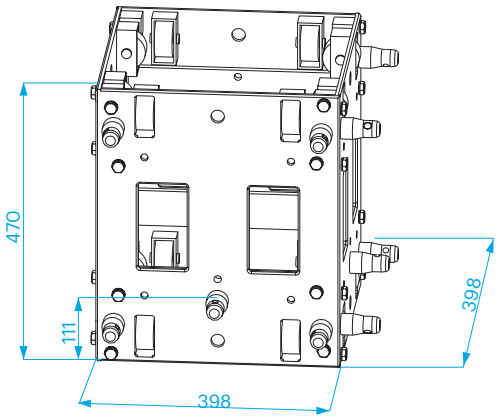

MPT-010
Sleeve module

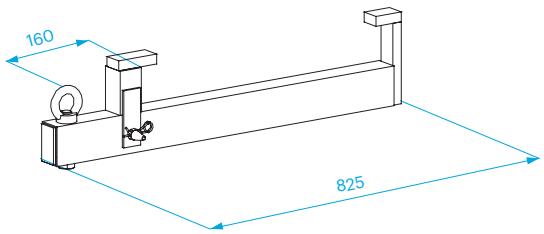

MPT-041
MPT Motor attachment. WLL 1000 kg.

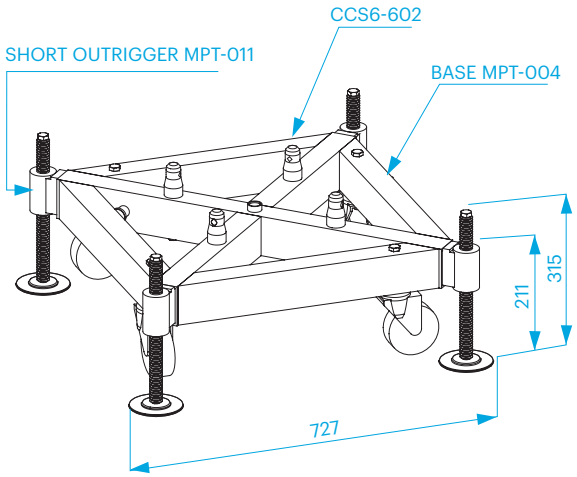

MPT-004
Base with MPT-011 short outriggers.

MPT-010 Sleeve module - Allowable cantilever load

Length (L)	H40V X40V PL (kg)	H40D X40D PL (kg)	H30V X30V PL (kg)	H30D X30D PL (kg)
0,5	400	160	400	130
1	200	80	200	65
1,5	130	50	130	40
2	100	40	100	30

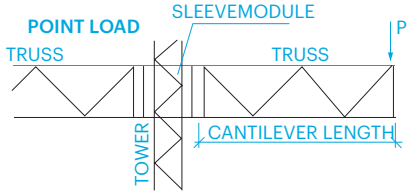

Technical specifications - MPT Tower

max. height	8.00 m
max. loading capacity	1000 kg*
type mast sections	H30V
sleeve block suitable for truss-series	X or H30D, X or H30V, X or H40D and X or H40V, H40R, S36R, S36V
alloy alu parts	EN-AW 6082 T6
coupling system tower	CCS6 series
self weight	115 kg

* There is a structural relation between tower height and size, further the applied load and the method of restraining the tower base and top also have its influence on the total loading capacity. All these factors must be taken into consideration when determining the allowable load.

More information can be found in the Prolyte BlackBook.

MPT-009
Top section. Pulley suitable for 6,7 and 8 mm chain.

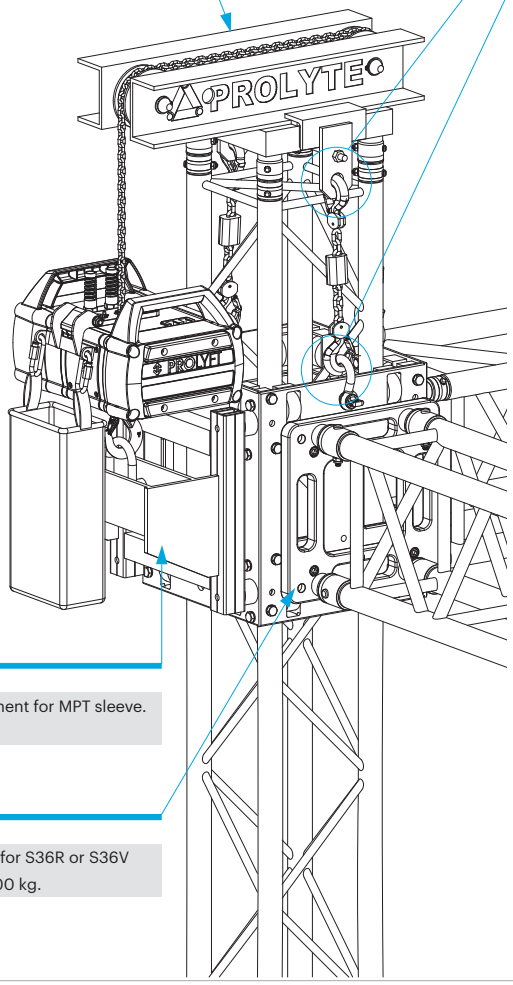

MPT-042
Motor attachment for MPT sleeve. WLL 1000 kg.

ACC-A-36R/V
Adapter plate for S36R or S36V truss. WLL 1000 kg.

MPT Safe

Code	Pieces	Description
MPR-009	2	MPT SLEEVE/ATTACH HIJSOOG
RI-SH3.2T	2	SHACKLE 3 2T WITH BOLT/NUT/PIN
CH-07-150CHH	2	CH 1.5T,L=150,CLUTCH,HOOK
BM-M12X400	1	THRDROD M12X400
BM-M12-N	4	NUT M12 DIN934
BM-M12-SW	4	WSHR M12 SPRNG DIN127B

Top Section Option 2:

MPT-009S
Top section-

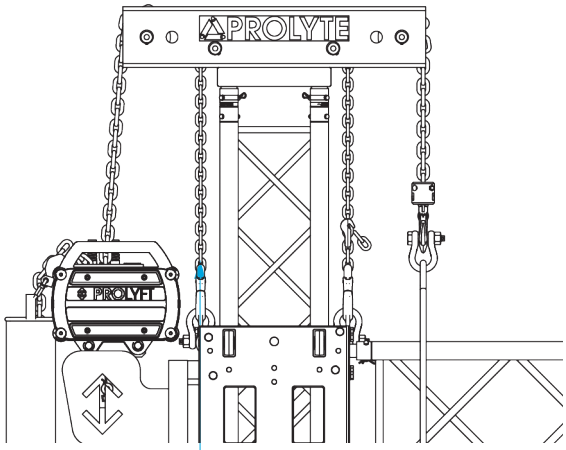

CH-08-200CHH
Safe Chain Sling; WLL 2T L=200CM,Clutch,2 Hooks

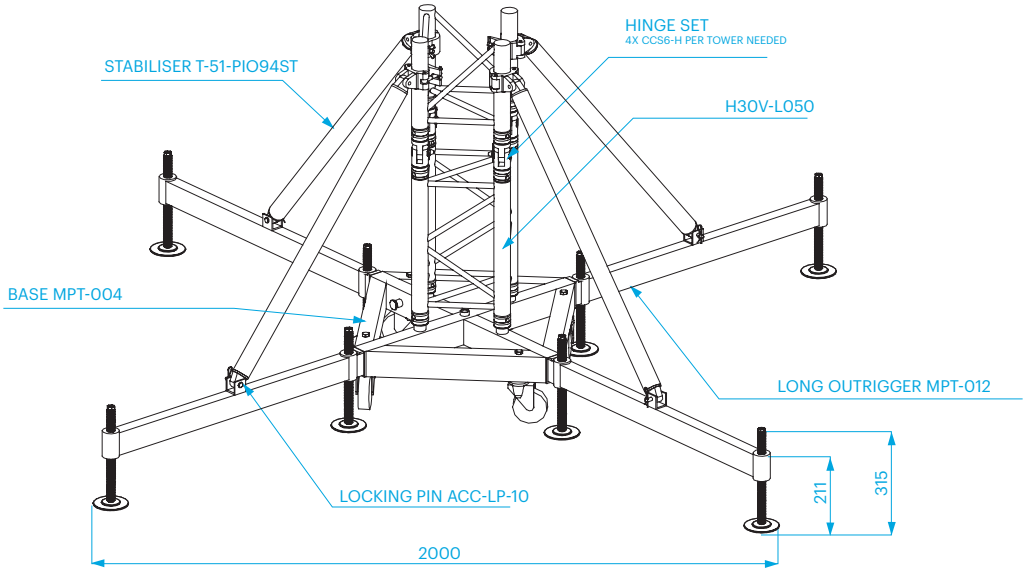

MPT-004
Base with MPT-012 long outriggers.

1. The black coated, steel base (MPT-004) is equipped with 4 castors and four half conical couplers (CCS6-602) for the attachment of the mast section. The base can be used with either short outriggers (MPT-011) or long outriggers (MPT-012), depending on the tower configuration.

2. To secure the outriggers within the base, a trigger pin is placed on the inside of the base frame. Pull the pin outwards when mounting the outriggers.

3. Disassemble the hinge set, mount the half hinges to both the mast sections (H30V truss). Male and female connections should be mounted diagonally (as shown in the picture) in order to facilitate the erection of the mast.

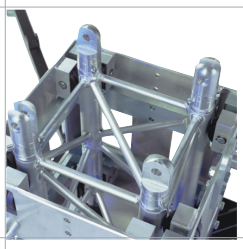

4. A completely mounted hinge set. First locate the hinge pins on one side. The truss now works as a hinge and can be erected easily. Subsequently locate the remaining hinge pins in the other side to fix the mast into position. Per tower 4 x CCS6-H needed. (hinge set MPT•ST tower).

5. Unscrew the screw jacks in the outriggers. Make sure that the castors of the base are free of any load. The complete load of the base should be supported by the screw jacks. Level the base by adjusting the screw jacks. The base must be perfectly level before the mast is erected. Long outriggers are needed for structures with three towers or less. Make sure the screw jacks can absorb tower forces through filler plates where needed.

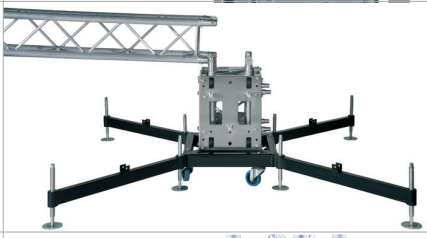

6. To use the MPT tower in combination with a chain hoist, Prolyte provides the motor attachment (MPT-041). This supplementary component can be attached to the base and has a fixing point for the chain hoist hook.

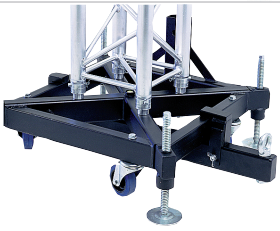

7. The sleeve block is lifted by use of a chain hoist or a hand winch. Chain hoists can be mounted with the help of the motor attachment (MPT-042).

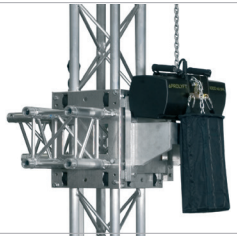

8 Prolyte recommends that, during storage and transportation, the MPT towers be mounted as an assembly of the following components: base section, 50 cm mast section, sleeve block, hinges and top section. This combination facilitates fast, efficient loading and building of the towers (size 60 × 60 x 115 cm, weight +/- 115 kg).

H40R TO MPT SLEEVE MODULE ADAPTER

The H40R truss is a rectangular standard H40 truss with a very clever program of specifications. The H40R measures 387 mm high by 287 mm wide. For the H40R Prolyte has developed a special adapter to be able to mount this flexible truss type on the MPT tower system, thereby offering more application possibilities.

The H40R is available in all standard lengths as well as a Box Corner. Apart from the standard lengths and Box Corner for the H40R range, Prolyte offers a Box Corner attachment and the H40R MPT adapter; completing the H40R range to a convenient and flexible range.

Depending on the coupling method, the following bolts are required to attach the adapter:

- To attach the H40R-MPT010-ADAP to the sleeve block: BM-M12X075 + BM-M12-N + BM-M12-SW
- To attach the CCS6-651: BM-M12X050-IB + BM-M12-SN + BM M12-SW
- To attach the CCS6-602: BM-M12X040 + BM-M12-SW

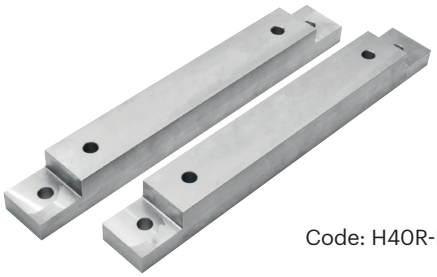

Code: H40R-MPT010-ADAP

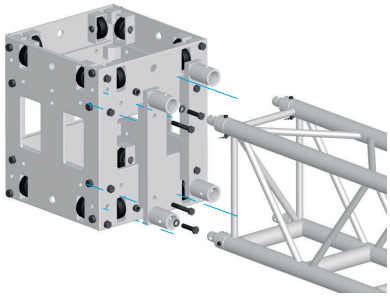

MPT BALLAST FRAME

The ballast frame MPT-005 is designed to offer a safe, engineered and easy solution for your ballast requirements. These aluminium frames are simply mounted between the long outriggers of your ST- or MPT base section. Layher screw spindles are placed at the outside for optimum levelling each ballast frame. The system doesn't require any tooling. Standard, pallet-sized water tanks fit on the resulting platforms to create your ballast weight.

HOW TO USE THE BALLAST FRAME

The ballast frames should be used only in conjunction with long outriggers and stabiliser braces. All ballast frames and ballast should be positioned symmetrically. For any other needed set-ups, please contact our engineering department. The amount of ballast required for a structure is dependent on the outcome of structural analysis. Due to deflection of components not all applied ballast can be activated. The outsides will stay grounded, while the area around the tower will have the tendency to tip or be lifted (see drawing example).

MPT-005 SPECIFICATIONS	
Weight	MPT-005: 17,8 kg/frame
Article Code:	MPT-005 MPT ballast frame 1000kg
Additional items required:	2 x ACC-SPIN-LAY/60-60 SCREWJACK per frame are needed.

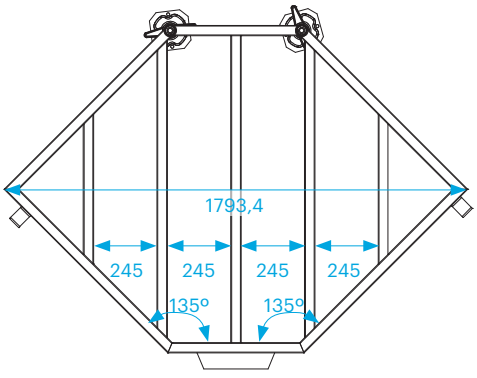

The HT tower is an upgrade on the MPT Tower, based on H30V truss sections and employs a new type of sleeve block that fits the 40 square series truss on all four sides by means of bolted CCS6 couplers (either male or female).

In combination with an adapter plate, it is also possible to use the sleeve block with either H40R or H30V truss, to maintain full capacity of the truss. The HT sleeve module is a fully bolted structural element, making it much stronger and more precise than conventional welded versions. Compared to the current MPT sleeve block, the HT sleeve block is reduced in size and has the same measurements as the standard H40V box corner. The transfer of forces is optimised, which makes the element as strong as the truss is — creating a significant increase of for example cantilever loads.

Also, a dedicated guywire attachment is integrated into the sleeve block. The sleeve block has on all 4 sides wire thread holes which are suitable to attach eye bolts which can take guywires to stabilize your system.

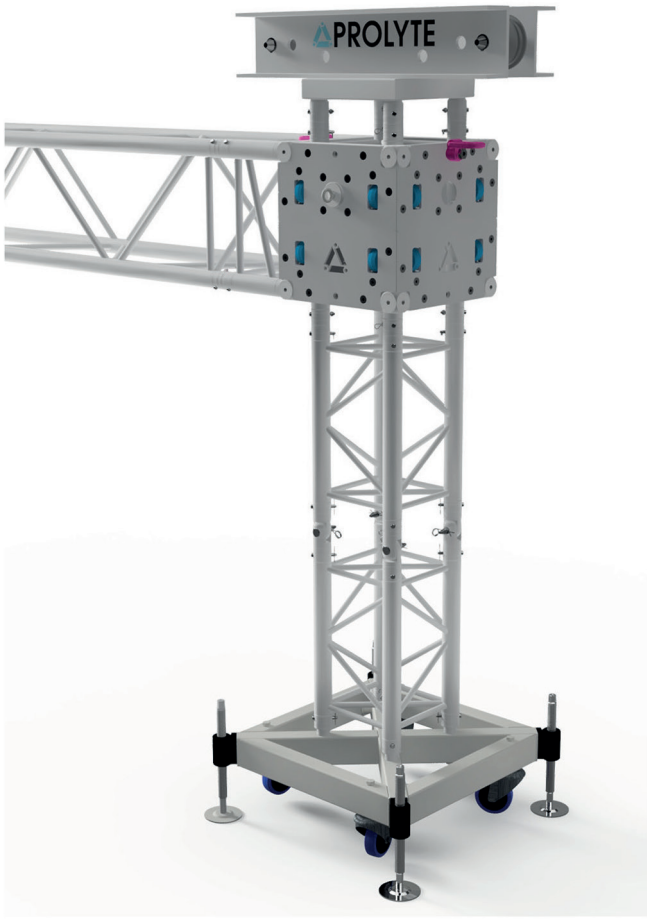

Advantages HT-010

- Fully bolted sleeve block, making it stronger than welded versions.
- Same size as the standard 40 series box corners.
- Suitable for H40V truss.
- Sleeve block with attachment points on four sides for eyebolts
- Improved strength compared to the MPT sleeve module
- Easy to use dead hang system.
- Adapter plate available for other truss series (H30V and H40R).

HT TOWER DEAD HANG SOLUTION

The HT tower also has a new dead hang solution. The dead hang of the system can now be done by a dead hang pin which will be placed through the sleeve block in a special H30V tower section with a length of 50 cm. This dead hang solution is quick, lightweight, easy to attach and protects your system also against uplift. The top section (MPT-009S) and base section (MPT-004) can facilitate the use of either a hand winch or a chain hoist.

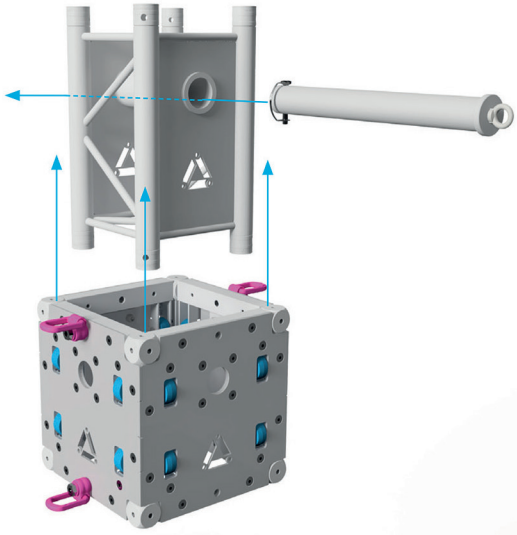

MPT-004 with the HT-010

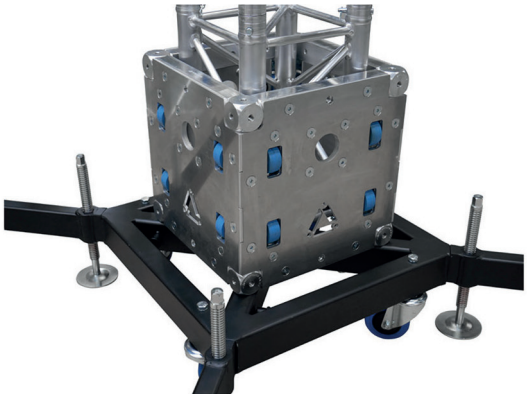

Dead hang Truss

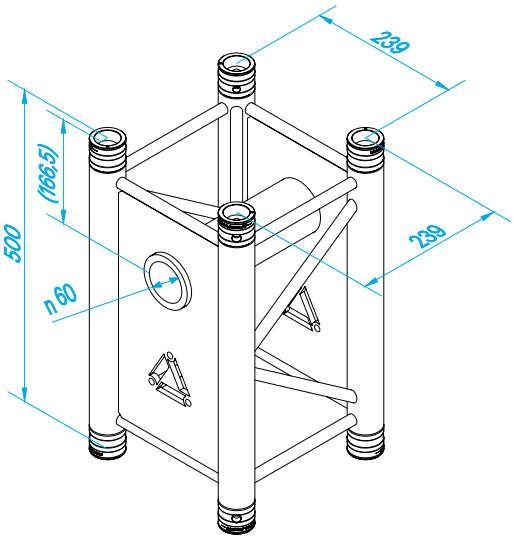

H30V-L•••-HT-DH
Dead hang Truss

Dead hang Sleeve module

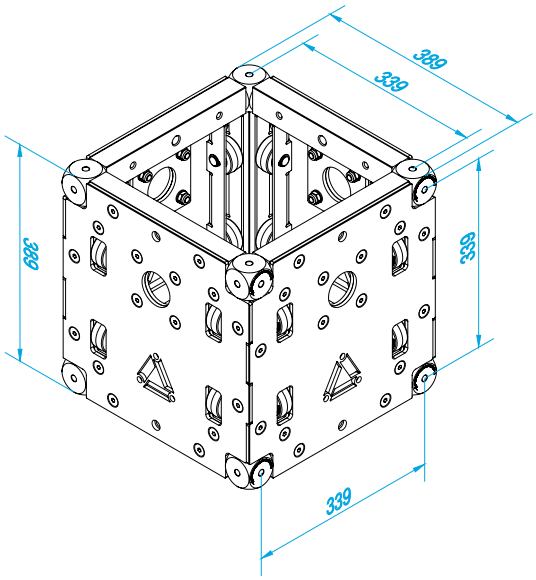

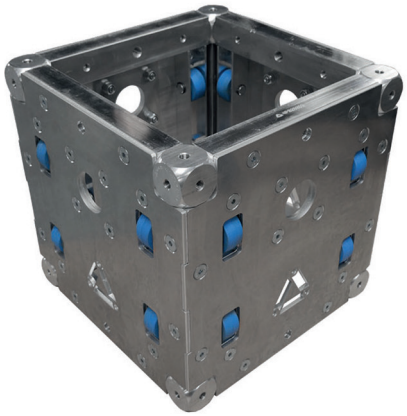

HT-010
Sleeve module

Dead hang Pin

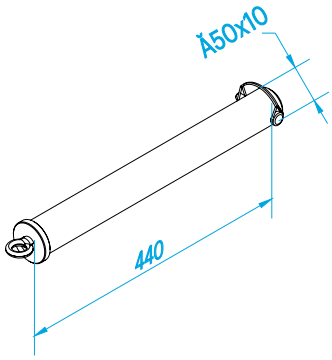

HT-DH-PIN
Deadhang Pin

ST TOWER - HEAVY DUTY TOWER SYSTEM

Photo: Enttech, Greece. Project: Voala Beach, Athens.

The ST tower is based on S40T mast sections. These mast sections have one-sided horizontal bracing to facilitate safe and easy climbing of the towers, with the use of an appropriate fall protection system. The ST tower uses several sleeve module that combine all the trusses from the S and B Series. This makes it possible to fit any of the S Series trusses to all four sides by means of bolted female CCS7 couplers. The ST tower has a self-weight of 120 kg.

The ST sleeve block is a fully bolted structural element, making it much stronger and more precise than conventional welded versions.

The ST tower is a cost-effective investment. You need only purchase the special parts if you wish to expand your truss system with towers.

There is a structural relation between tower length and size. Additionally, the applied load and the method of restraining the tower base also contribute to determination of the total loading capacity. All these factors must be taken into consideration when determining the allowable load and tower length.

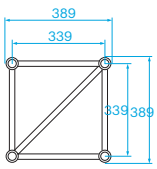

S40T - Series standard available lengths

Meters	0,5	1,00	1,50	2,00	2,50	3,00	4,00	Average weight per meter = 10,3 kg
Feet	1.64	3.28	4.92	6.56	8.20	9.84	13.12	Average weight in pounds per feet = 6,93 LBS

S40T - Allowable loading

SPAN		Uniformly Distributed Load		DEFLECTION		MAXIMUM ALLOWABLE POINT LOADS										SPAN
		UDL				Centre Point Load				Single Load Third Points Load per Point		Single Load Fourth Points Load per Point		Single Load Fifth Points Load per Point		
						CPL		DEFLECTION		TPL		QPL		FPL		
m	ft	kg/m	lbs/ft	mm	inch	kgs	lbs	mm	inch	kgs	lbs	kgs	lbs	kgs	lbs	total weight
3	9,8	1532,2	1031,0	6	0,2	2857,8	6307,2	5	0,2	1835,6	4051,1	1473,6	3252,2	1149,2	2536,2	36
4	13,1	1146,5	771,4	10	0,4	2344,0	5173,2	8	0,3	1534,8	3387,4	1202,8	2654,7	1002,4	2212,2	48
5	16,4	765,9	515,4	16	0,6	1914,8	4226,0	13	0,5	1324,1	2922,2	957,4	2113,0	797,8	1760,8	60
6	19,7	528,6	355,7	23	0,9	1585,8	3499,8	18	0,7	1162,0	2564,5	792,9	1749,9	660,7	1458,3	72
7	23,0	385,5	259,4	31	1,2	1349,2	2977,7	25	1,0	1011,9	2233,3	674,6	1488,9	562,2	1240,7	84
8	26,2	292,6	196,9	41	1,6	1170,4	2583,2	32	1,3	877,8	1937,4	585,2	1291,6	487,7	1076,3	96
9	29,5	228,9	154,0	51	2,0	1030,2	2273,6	41	1,6	772,6	1705,2	515,1	1136,8	429,2	947,3	108
10	32,8	183,4	123,4	63	2,5	916,9	2023,6	51	2,0	687,7	1517,7	458,5	1011,8	382,0	843,2	120
11	36,1	149,7	100,7	77	3,0	823,2	1816,9	61	2,4	617,4	1362,7	411,6	908,4	343,0	757,0	132
12	39,4	124,0	83,5	91	3,6	744,3	1642,6	73	2,9	558,2	1232,0	372,1	821,3	310,1	684,4	144
13	42,6	104,1	70,0	107	4,2	676,7	1493,4	86	3,4	507,5	1120,0	338,3	746,7	281,9	622,2	156
14	45,9	88,3	59,4	124	4,9	617,9	1363,7	99	3,9	463,4	1022,8	309,0	681,9	257,5	568,2	168
15	49,2	75,5	50,8	143	5,6	566,3	1249,8	114	4,5	424,7	937,3	283,1	624,9	235,9	520,7	180
16	52,5	65,1	43,8	162	6,4	520,4	1148,6	130	5,1	390,3	861,4	260,2	574,3	216,8	478,6	192

1 inch = 25,4 mm | 1m = 3.28 ft | 1 lbs = 0,453 kg

- Tüv certification only valid for loading table above.
- Loading figures are only valid for static loads.
- Loading figures are only valid for single spans with supports at both ends.
- All static systems, other than single spans, need an individual structural calculation. Please contact a structural engineer or Prolyte for assistance.
- Loading figures are calculated according to and in full compliance with European standards (Eurocode).
- The self-weight of the trusses is already taken into account.
- Loading figures are only valid for the cross sectional orientation of the truss as shown by the icon in the loading table.
- The interaction between bending moment and shear force at the connection point is already taken into account.
- Truss spans can be assembled from different truss lengths.
- Read the manual before assembling, using and loading the truss.

Technical Specifications - S40T

Types	Tower truss
Alloy	EN AW 6082 T6
Main Chords	50x4
Diagonal Members	25x3
Coupling System	CCS6

Structural data can be found at www.prolyte.com

Technical specifications - ST Tower

max. height	depends on structure and tower length
max. loading capacity*	2000 kg**
type mast sections	S40T
sleeve block suitable for truss-series	S36R•V, S52F•V, S66R•V, S100F and B100RV (with various sleeve blocks)
alloy alu parts	EN - AW 6082 T6
main chords mast sections	50 x 4 mm
braces mast sections	25 x 3 mm, 30 x 3 mm
coupling system tower	CCS6 - Serie
self weight	120kg

* To be used with chain hoist only.

** There is a structural relation between tower height and size, further the applied load and the method of restraining the tower base and top also have its influence on the total loading capacity. All these factors must be taken into consideration when determining the allowable load.

More information can be found in the Prolyte BlackBook.

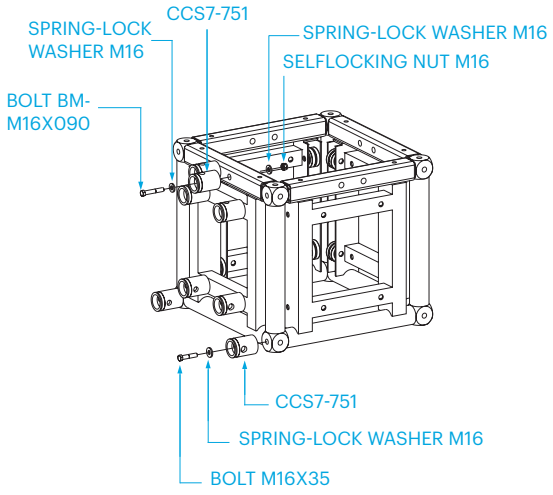

ST-010
Sleeve block overview accessories

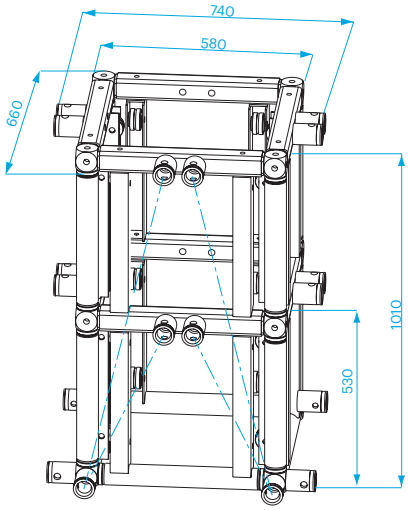

ST-010-4-100F/52F
Sleeve block for S52F / S100F / B100RV

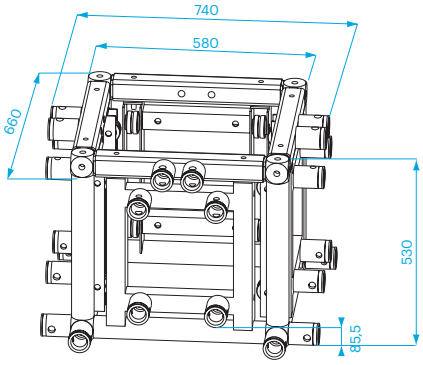

ST-010-4-52F/36R
Sleeve block for S36R and S52F

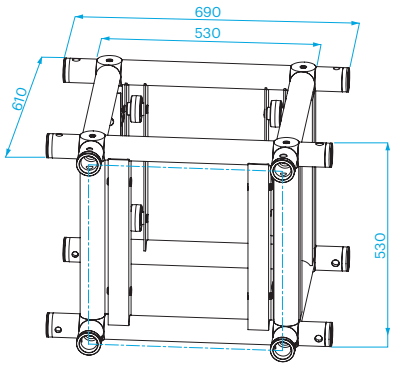

ST-010-4-52V
Sleeve block for 52V

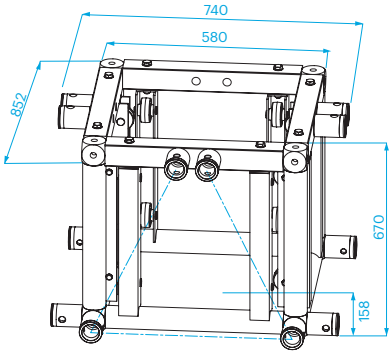

ST-010-4-52F
Sleeve block for 52F

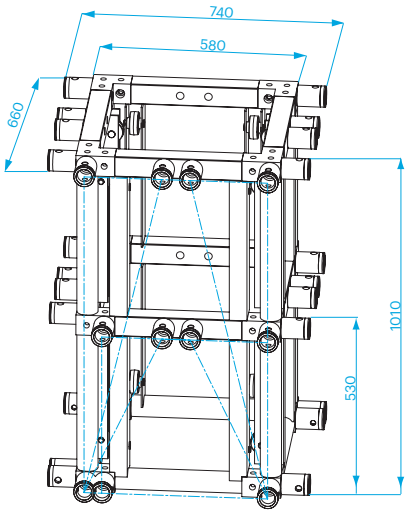

ST-010-4-100-52
Sleeve block for all 52 and 100 series

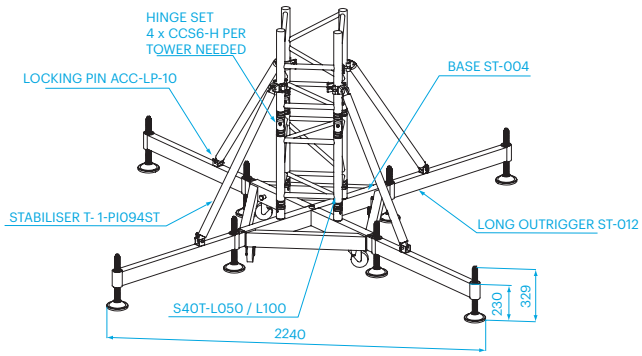

ST-004
Base with ST-012 long outriggers

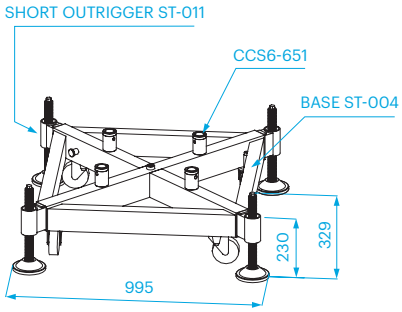

ST-004
Base with ST-011 short outriggers

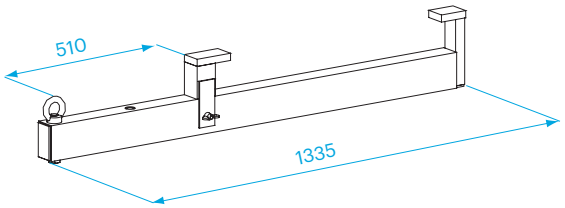

ST-041
ST Motor attachment. WLL 1000 kg

ST-010 Sleeve Module - Allowable cantilever load

Length (L)	S52V/SV P (kg)	S52F P (kg)	B100RV P (kg)	S100F P (kg)
1	1565	833	3773	1040
1,5	1321	716	3356	976
2	1140	626	3020	918
2,5	1001	556	2651	865
3	890	472	2356	816
3,5	800	389	2115	771
4	724	324	1991	727
4,5	660	271	1744	632
5	605	226	1598	554
5,5	557	188	1470	487
6	515	153	1358	429

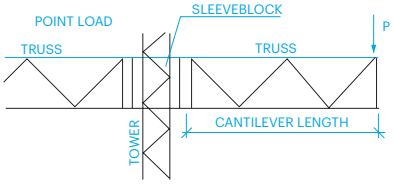

ST-009

Top section with added wheels for optimal dead hang position (optional available) Pully suitable for 6, 7 and 8mm chain.

ST Safe

Code	Pieces	Description
ST-010-SAFE	2	SLEEVEBLK,SAFETYBAR,S52/100
BM-M16x120	4	BLT M16X120 8.8 DIN931
BM-M16-SW	4	WSHR M16 SPRNG DIN127B
SP-WHEEL-SAFE-009	2	POCKET WHEEL FOR 10MM CHAIN L=46.00
ACC-LP-30	2	LOCKING PIN 30MM L=147.00
ACC-LP-30-S	2	LOCKING PIN 30MM SHORT L=101.40
CCS7-705	4	SPIGOT R-SPRING, CCS 700
SP-MPT-TOW-009-B	4	BEARING FOR MPT009
CH-10-450CRR	1	CH.3T L=450, CLUTCH+RING

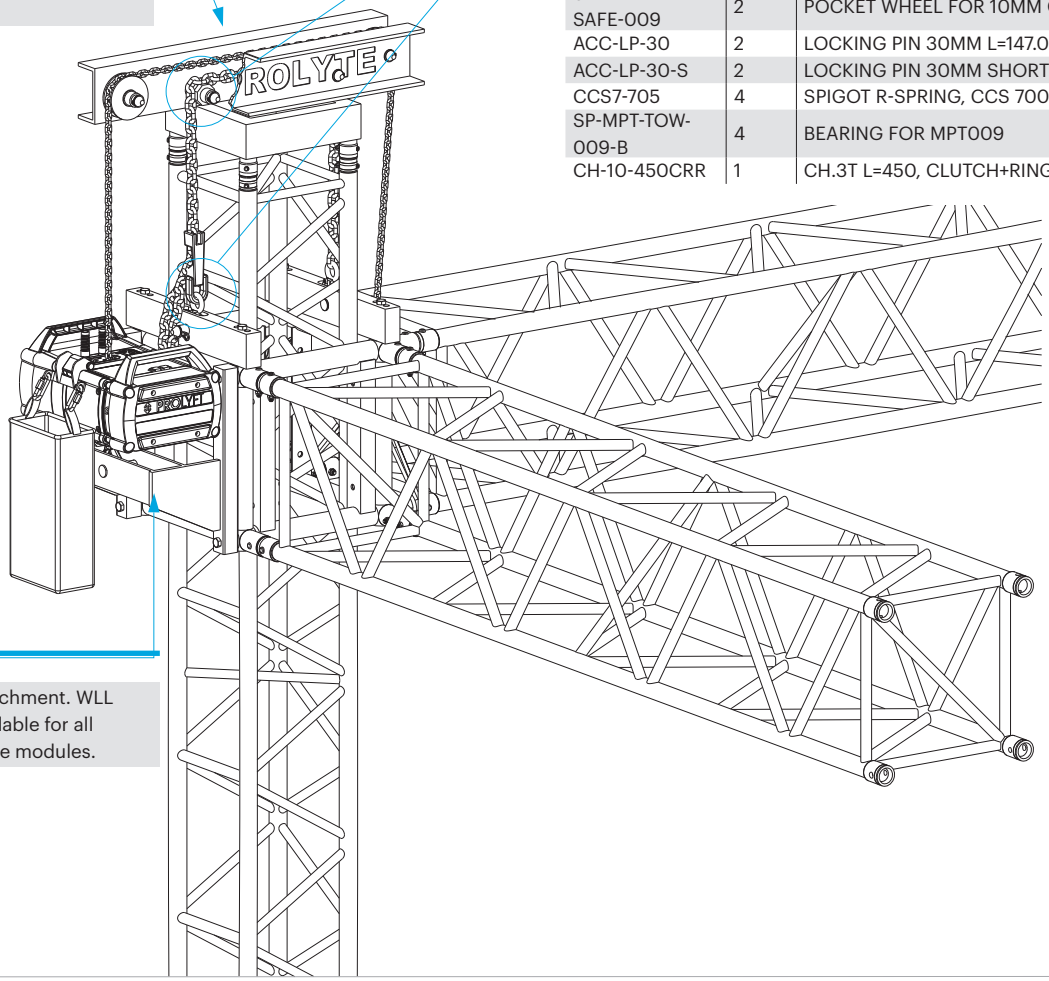

ST-042

ST Motor attachment. WLL 1000 kg, available for all S-series sleeve modules.

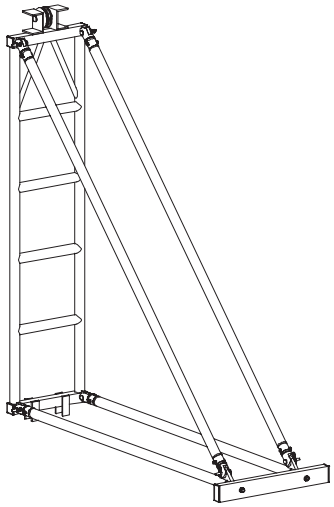

ST-HELP erecting system

The ST-HELP can be used to erect the ST towers.
Use with a 1ton electrical chain hoist.
Attach to truss by means of a ratchet strap. Read the manual first!

1. The black coated, steel base (ST-004) is equipped with 4 castors and four female couplers (CCS6-651) for attachment of the mast section. In most cases, the first mast section can be 50 cm long; however, when S66 or S100 truss is used in the grid a mast section of 100 cm should be used. The base can be used with either short outriggers (ST-011) or long outriggers (ST-012).

2. To secure the outriggers within the base, a trigger pin is placed on the inside of the base frame. Pull the pin outwards when mounting the outriggers.

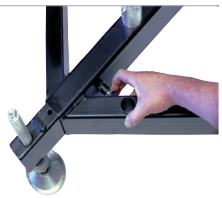

3. The ST tower can only be used with a chain hoist. The hoist can be attached in two ways (please see pictures 7 and 8).

4. Disassemble the hinge set, mount the half hinges to both mast sections (S40T truss). Male and female connections should be mounted diagonally (as shown in the picture), in order to facilitate the erection of the mast.

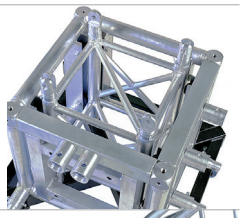

5. A completely mounted hinge set. First locate the hinge pins on one side. The truss now works as a hinge and can be erected easily. Then locate the remaining hinge pins on the other side to fix the mast into position. Per tower 4 x CCS6-H are needed (hinge set MPT•ST tower). Only use CCS-604ST spigot pins to connect the mast sections, to prevent damage to your sleeve block and the risk of getting "stuck".

6. Unscrew the screw jacks in the outriggers, making sure that the castors of the base are free of any load. The complete load of the base should be supported by the screw jacks. Level the base by adjusting the screw jacks. The base must be perfectly level before the mast is erected. Long outriggers are needed for structures with three towers or less.

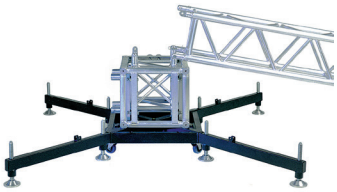

7. To use the ST tower in combination with a chain hoist, Prolyte provides the motor attachment (ST-041). This supplementary component can be attached to the base and has a fixing point for the chain hoist hook. WLL 1000 kg.

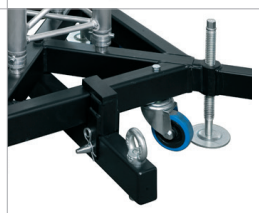

8. Chain hoists can be attached by use of the motor attachment (ST042). Chain hoists can also be mounted to the grid and sleeve block.

9. Prolyte advises that during storage and transportation the ST towers are mounted as an assembly of the following components; base section, 50 cm mast section, sleeve block and top section. This combination facilitates fast, efficient loading and building of the towers (size 80 x 80 x 120 cm, weight +/- 120 kg).

ST BALLAST FRAME

The ballast frame ST-005 is designed to offer a safe, engineered and easy solution for your ballast requirements. These aluminium frames are simply mounted between the long outriggers of your ST- or MPT base section. Layher screw spindles are placed at the outside for optimum levelling each ballast frame. The system doesn't require any tooling. Standard, pallet-sized water tanks fit on the resulting platforms to create your ballast weight.

HOW TO USE THE BALLAST FRAME

The ballast frames should be used only in conjunction with long outriggers and stabiliser braces. All ballast frames and ballast should be positioned symmetrically. For any other needed set-ups, please contact our engineering department. The amount of ballast required for a structure is dependent on the outcome of structural analysis. Due to deflection of components not all applied ballast can be activated. The outsides will stay grounded, while the area around the tower will have the tendency to tip or be lifted (see drawing example).

ST-005 SPECIFICATIONS

Weight	ST-005: 29,15 kg/frame
Article Code:	ST-005 St ballast frame 1350kg
Additional items required:	2 x ACC-SPIN-LAY/60-60 SCREWJACK per frame are needed.

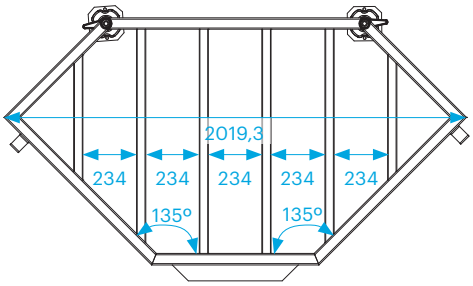

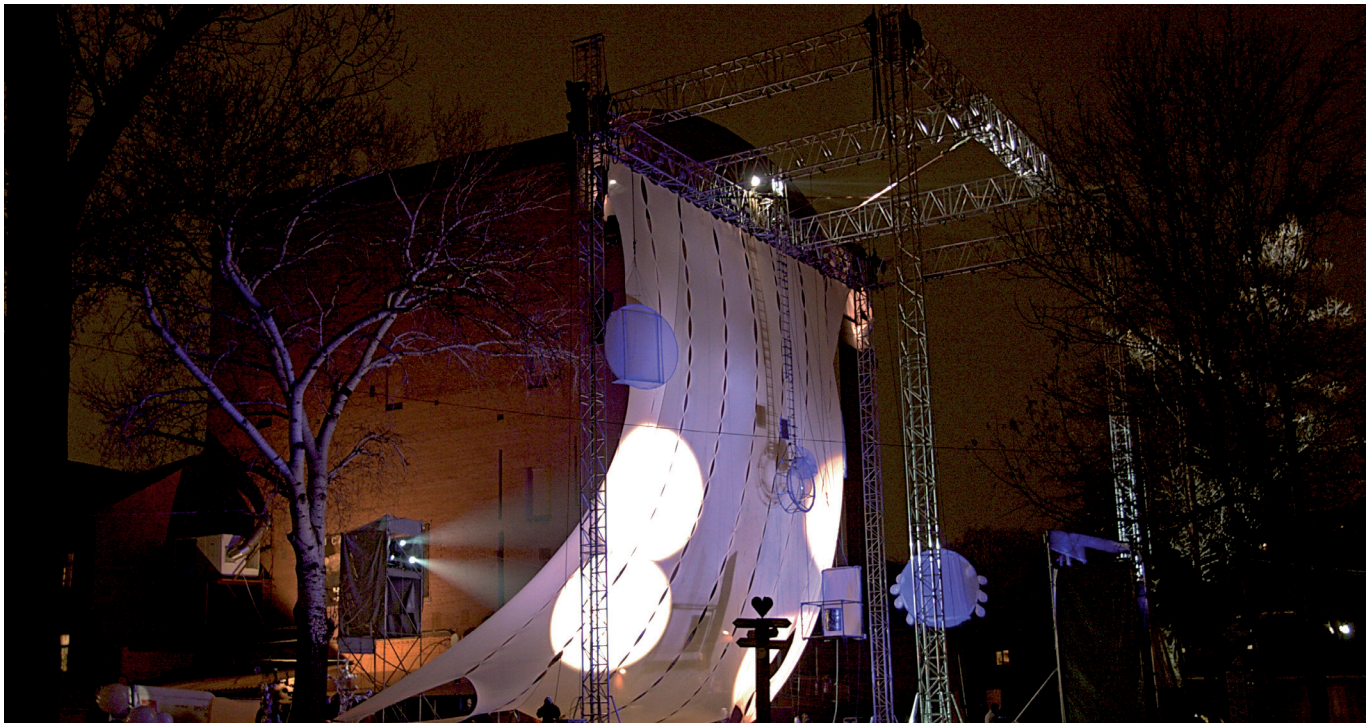

Photo: ModifiC, Russian Federation. Project: Russian telecommunication company “Caravan”.

The CT tower is based on C52T mast sections. These mast sections have onesided horizontal bracing to facilitate safe and easy climbing of the towers. C52T truss is constructed of main chords of 60 x 5 mm and diagonals of 30 x 3/48 x 3 mm. Use the CCS7 coupling system with the CCS7-704 or CCS7-703-C52T shortened spigot pin. The base section of the CT tower is similar to the ST tower; the outside dimensions and setup are the same. Extra spindles are added to the base section to absorb the extra forces resulting from the tower’s higher loading capacity. Existing ST base sections can be upgraded to accommodate CT towers on request.

The CT tower uses several sleeve modules that combine all the trusses from the S and B Series. This makes it possible to fit almost all S-Series trusses to all four sides by means of bolted female CCS7 couplers. The outside dimensions of the CT sleeve block are the same as the ST sleeve block; both can be combined in one grid. The CT tower has a self-weight of 140 kg.

The CT sleeve block is a fully bolted structural element, making it much stronger and more precise than conventional welded versions.

The CT tower is a cost-effective investment. You need only purchase the special parts if you wish to expand your truss system with towers. There is a structural relation between tower length and size. Additionally, the applied load and the method of restraining the tower base also contribute to determination of the total loading capacity. All these factors must be taken into consideration when determining the allowable load and tower length.

The allowable load given is based on a uniformly distributed load (UDL). Load cases with several point loads can show much better loading capacities.

CT Series - standard available lengths

Meters	0,5	1,00	1,50	2,00	2,50	3,00	4,00	5,00	Average weight per meter = 16,5 kg.
Feet	1,64	3,28	4,92	6,56	8,20	9,84	13,12	16,4	Average weight in pounds per feet = 11,1 lbs.

C52T - Allowable loading

SPAN		Uniformly Distributed Load UDL		DEFLECTION		Centre Point Load CPL		DEFLECTION		Single Load Third Points Load per Point TPL		Single Load Fourth Points Load per Point QPL		Single Load Fifth Points Load per Point FPL		SPAN
						MAXIMUM ALLOWABLE POINT LOADS										
m	ft	kg/m	lbs/ft	mm	inch	kgs	lbs	mm	inch	kgs	lbs	kgs	lbs	kgs	lbs	total weight
6	19,7	933,4	628,0	21	0,8	3049,7	6730,6	17	0,7	2045,5	4514,3	1687,8	3724,9	1396,5	3082,0	114
7	23,0	798,1	537,0	28	1,1	2716,4	5995,1	23	0,9	1809,1	3992,6	1517,7	3349,6	1197,4	2642,7	133
8	26,2	696,7	468,8	37	1,5	2446,1	5398,6	30	1,2	1647,4	3635,9	1378,7	3042,8	1058,1	2335,2	152
9	29,5	613,6	412,9	47	1,8	2222,1	4904,2	38	1,5	1510,8	3334,4	1238,0	2732,4	957,8	2113,8	171
10	32,8	494,5	332,7	58	2,3	2033,2	4487,4	46	1,8	1393,7	3075,9	1121,9	2476,0	873,7	1928,3	190
11	36,1	406,3	273,4	70	2,8	1871,6	4130,6	56	2,2	1292,1	2851,6	1024,3	2260,6	802,2	1770,4	209
12	39,4	339,3	228,3	83	3,3	1731,4	3821,3	67	2,6	1202,9	2654,8	940,9	2076,6	740,5	1634,3	228
13	42,6	287,1	193,2	98	3,8	1608,6	3550,2	78	3,1	1124,0	2480,6	868,8	1917,5	686,7	1515,5	247
14	45,9	245,7	165,3	113	4,5	1500,0	3310,4	91	3,6	1053,5	2325,1	805,8	1778,3	639,3	1410,9	266
15	49,2	212,3	142,8	130	5,1	1403,0	3096,4	104	4,1	990,1	2185,2	750,1	1655,4	597,1	1317,8	285
16	52,5	184,9	124,4	148	5,8	1315,8	2904,1	119	4,7	932,8	2058,6	700,5	1545,9	559,3	1234,5	304
17	55,8	162,3	109,2	167	6,6	1237,0	2730,0	134	5,3	880,5	1943,3	655,9	1447,6	525,3	1159,2	323
18	59,0	143,3	96,4	187	7,4	1165,1	2571,4	150	5,9	832,7	1837,7	615,7	1358,8	494,3	1090,9	342
19	62,3	127,2	85,6	209	8,2	1099,4	2426,3	167	6,6	788,6	1740,5	579,1	1278,0	466,0	1028,5	361
20	65,6	113,5	76,4	231	9,1	1038,8	2292,7	185	7,3	747,9	1650,7	545,6	1204,1	440,1	971,2	380
21	68,9	101,7	68,4	255	10,0	982,9	2169,2	204	8,0	710,2	1567,3	514,8	1136,2	416,1	918,4	399
22	72,2	91,5	61,5	280	11,0	930,9	2054,6	224	8,8	674,9	1489,6	486,4	1073,4	393,9	869,4	418
23	75,4	82,5	55,5	306	12,0	882,5	1947,8	245	9,6	642,0	1416,9	460,0	1015,2	373,3	823,9	437

- Tüv certification only valid for loading table above.
- Loading figures are only valid for static loads.
- Loading figures are only valid for single spans with supports at both ends.
- All static systems, other than single spans, need an individual structural calculation. Please contact a structural engineer or Prolyte for assistance.
- Loading figures are calculated according to and in full compliance with European standards (Eurocode).
- The self-weight of the trusses is already taken into account.
- Loading figures are only valid for the cross sectional orientation of the truss as shown by the icon in the loading table.
- The interaction between bending moment and shear force at the connection point is already taken into account.
- Truss spans can be assembled from different truss lengths.
- Read the manual before assembling, using and loading the truss.

Technical specifications CT Tower

max. height	20,00 m
max. loading capacity*	5000 kg**
sleeve block suitable for truss-series	S52F•V, S66R•V, S100F and B100RV (with various sleeve blocks)
alloy alu parts	EN-AW 6082 T6

* To be used with chain hoist only.

** There is a structural relation between tower height and size, further the applied load and the method of restraining the tower base and top also have its influence on the total loading capacity. All these factors must be taken into consideration when determining the allowable load.

More information can be found in the Prolyte BlackBook.

Technical Specifications - C52T

Types	Tower truss
Alloy	EN AW 6082 T6
Main Chords	60 x 5 mm
Diagonal Members	30 x 3 / 48 x 3 mm
Coupling System	CCS7

Structural data can be found at www.prolyte.com

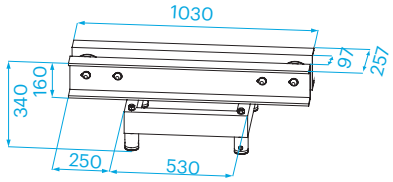

C52T-009

Top section. Pully suitable for 8 mm chain or 8 mm steel wire.

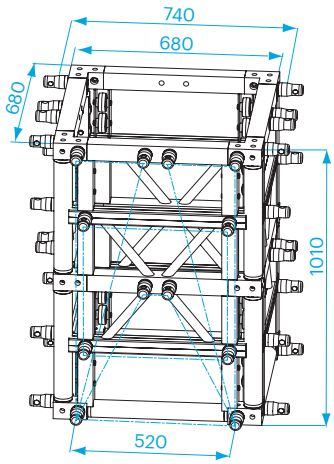

C52T-010-4-100-52-0

Sleeve block for B100RV / S52F / S52V /S100F.

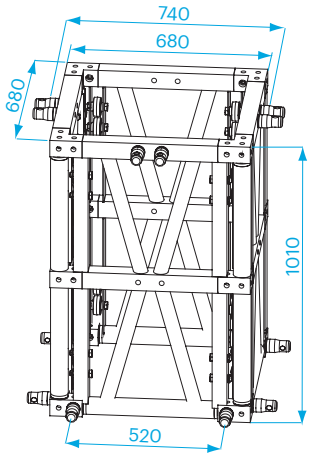

C52T-010-4-100-52F-0

Sleeve block for B100RV / S52F / S100F.

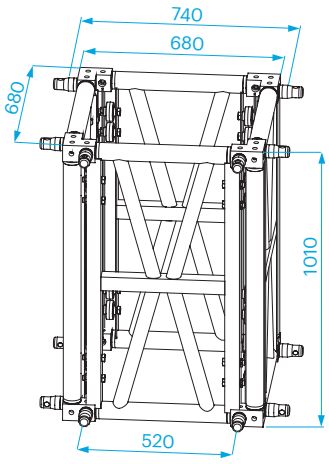

C52T-010-4-B100-0

Sleeve block for B100RV.

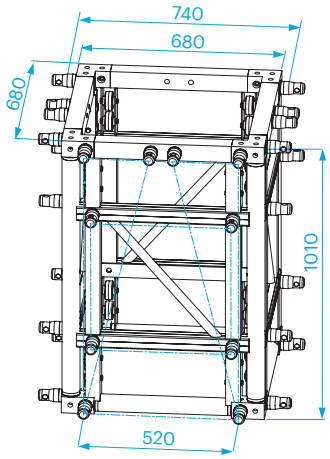

C52T-010-4-100-52V-0

Sleeve block for B100RV / S100F / S52V.

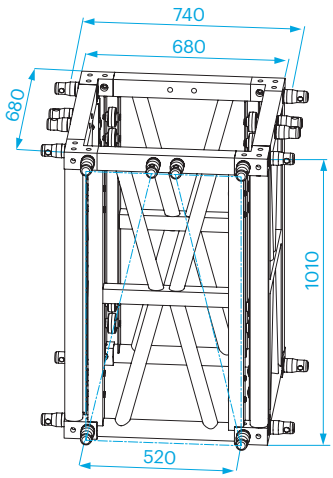

C52T-010-4-B/S100-0

Sleeve block for B100RV / S100F.

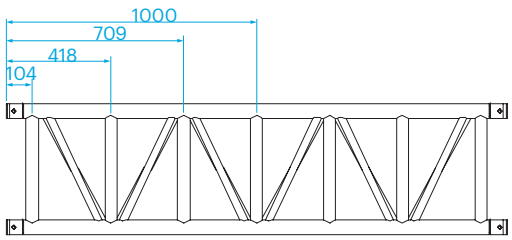

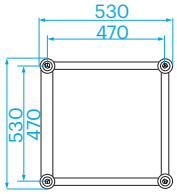

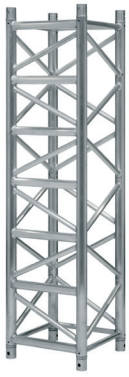

CT-010 Sleeve Block - Allowable cantilever load

Length (L)	B100RV
	P (kg)
1	3141
1,5	2383
2	1911
2,5	1587
3	1351
3,5	1169
4	1025
4,5	907
5	808
5,5	724
6	651

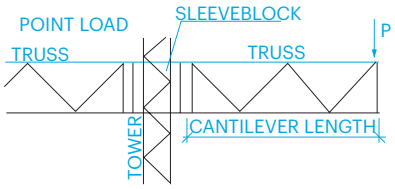

Photo: Neuro Tech Asia

The DT tower is based on D75T mast sections. These mast sections have a four side diagonal webbing with on one side en extra horizontal bracing to facilitate safe and easy climbing of the towers with an appropriate fall protection system. The tower modules are equipped with a pin/fork connection system for easy assembly.

While the D75T towers can be loaded up to 30 tonnes at a height of 20 m, building a complete grid or ground support system requires more elements, designed to absorb substantial loads. Using the M145RV Mammoth truss you can build spans up to 60 metres, still allowing a centre point load of 2000 kg. For use in ground support systems, Prolyte has designed a sleeve block for the D75 tower, the D75T-010-4-M145RV-0, which combines the D75T towers with the M145RV Mammoth truss.

The sleeve block can handle a cantilever point load of 2000 kg at a 10m cantilever. Furthermore, the sleeve block is equipped with a pinned dead hang system, this facilitates a dedicated dead hang position within the tower and increases the tower loading capacity significantly. Sliding the dead hang pin into its integrated holder within the tower is easy, quick and safe.

The base section can be integrated into a 2072 x 2072 scaffolding system and creates integral stability for the tower section, which results in an increase of the tower capacity. It features integrated dedicated attachments for guy wires and lifting points.

D75T-L280 DEAD HANG

D75T-010-SAFE (1:30)

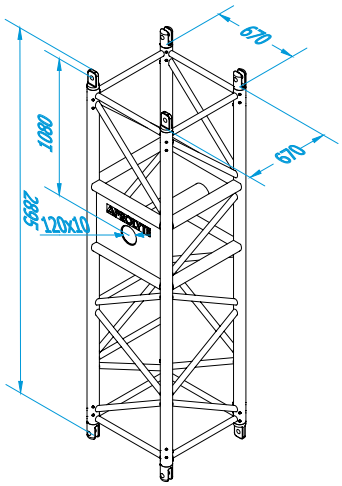

D75T-010-4-M145RV-0

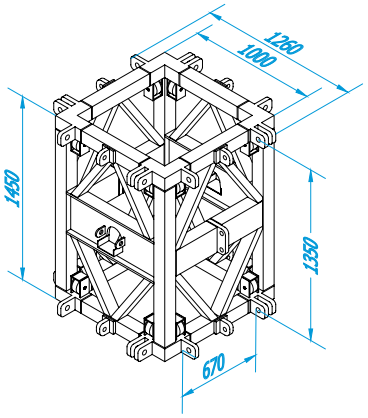

SR-Base-Top-D75T

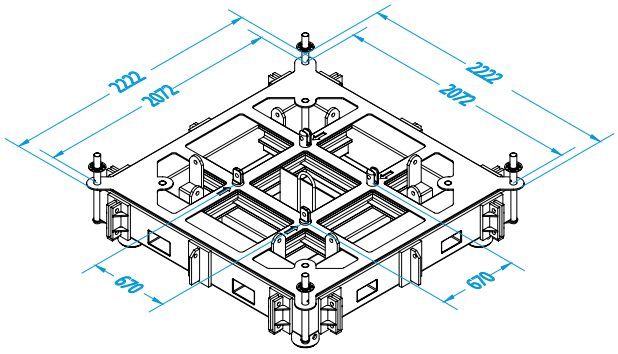

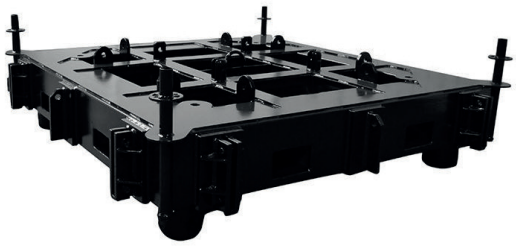

DT TOWER

Code	Description
BOX-M145RV-0	Box corner for M145RV Truss, steel black coated, self-weight 750 kg
SR-BASE-TOP-D75T	Base section for D75T tower, steel, black coated, self-weight 1850 kg
D75T-010-4-M145RV-0	Sleeve block for D75T tower, M145RV, attachments, steel, black coated, self-weight 850 kg
D75T-009-2T	Top section for D75 tower, suited for single reeved 2-tonne hoists, steel, black coated, self-weight 175 kg
D75T-L280 DEAD HANG	Dead hang truss with integrated dead hang position
D75T-010-SAFE	Dead hang pin for the D75T tower, steel, self-weight 30 kg
D75T-010-ATT	Lifting bracket for the D75T sleeve block, to accommodate single reeved 2-toone hoist

Photo: Neuro Tech Asia

The D75T truss is a continuation of the development of the very heavy-duty truss range. The D75T truss, with outside measurements of 75 x 75 mm and main chords of 80 mm is designed as a truss for special applications where extreme loads or circumstances require extreme strength. The D75T truss can be used for ultra heavy tower systems or in combination with the mammoth truss or Space Roof.

The design is such that it can be used in configurations as a tower or as a span. Besides that, it has four-sided webbing with integrated ladder steps. The smart placing of the pin-fork connection makes it non-orientated and facilitates assembly.

D75T

Top View

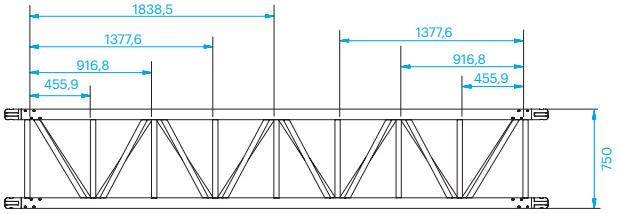

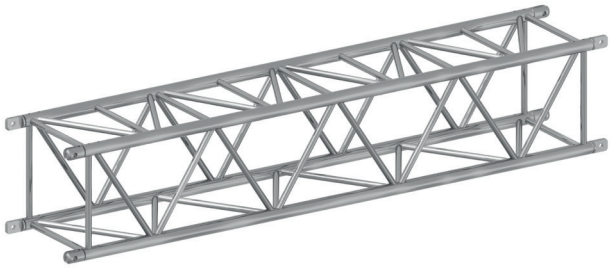

Side View

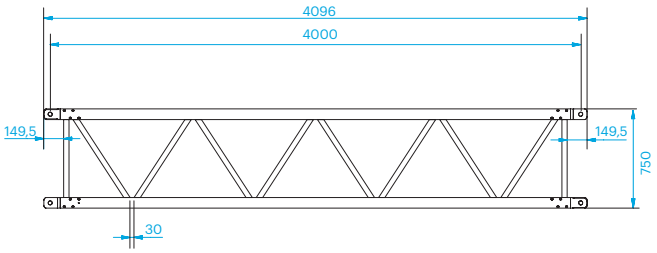

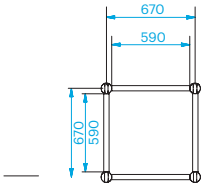

D75T - Allowable Loading

		Uniformly Distributed Load				MAXIMUM ALLOWABLE POINT LOADS										
						Centre Point Load				Single Load Third Points Load per Point		Single Load Fourth Points Load per Point		Single Load Fifth Points Load per Point		
SPAN		UDL		DEFLECTION		CPL		DEFLECTION		TPL		QPL		FPL		SPAN
m	ft	kg/m	lbs/ft	mm	inch	kgs	lbs	mm	inch	kgs	lbs	kgs	lbs	kgs	lbs	total weight
16	52,5	541,1	364,1	95	3,7	4960,3	10947	75,9	3,0	3720,3	8210,6	2480,2	5473,7	2066,8	4561,4	640.0
17	55,8	507,2	341,3	107	4,2	4633,6	10226	85,6	3,4	3475,2	7669,8	2316,8	5113,2	1930,7	4261,0	680.0
18	59,0	477,0	321,0	120	4,7	4341,2	9581	96,0	3,8	3255,9	7185,7	2170,6	4790,5	1808,8	3992,1	720.0
19	62,3	429,2	288,8	134	5,3	4077,6	8999	107,0	4,2	3058,2	6749,5	2038,8	4499,7	1699,0	3749,7	760.0
20	65,6	383,9	258,3	148	5,8	3838,7	8472	118,5	4,7	2879,0	6354,0	1919,3	4236,0	1599,4	3530,0	800.0
21	68,9	344,8	232,0	163	6,4	3620,7	7991	130,7	5,1	2715,5	5993,2	1810,4	3995,5	1508,6	3329,6	840.0
22	72,2	311,0	209,3	179	7,1	3421,0	7550	143,4	5,6	2565,7	5662,6	1710,5	3775,0	1425,4	3145,9	880.0
23	75,4	281,5	189,4	196	7,7	3237,0	7144	156,8	6,2	2427,8	5358,1	1618,5	3572,0	1348,8	2976,7	920.0
24	78,7	255,6	172,0	213	8,4	3066,9	6769	170,7	6,7	2300,2	5076,5	1533,4	3384,3	1277,9	2820,3	960.0
25	82,0	232,7	156,6	231	9,1	2908,9	6420	185,2	7,3	2181,7	4815,0	1454,5	3210,0	1212,1	2675,0	1000.0
26	85,3	212,4	142,9	250	9,9	2761,7	6095	200,3	7,9	2071,3	4571,4	1380,9	3047,6	1150,7	2539,7	1040.0
27	88,6	194,4	130,8	270	10,6	2624,1	5791	216,0	8,5	1968,1	4343,6	1312,1	2895,7	1093,4	2413,1	1080.0
28	91,8	178,2	119,9	290	11,4	2495,0	5507	232,3	9,1	1871,3	4129,9	1247,5	2753,3	1039,6	2294,4	1120.0
29	95,1	163,7	110,1	311	12,3	2373,6	5239	249,2	9,8	1780,2	3929,0	1186,8	2619,3	989,0	2182,8	1160.0
30	98,4	150,6	101,3	333	13,1	2259,1	4986	266,7	10,5	1694,3	3739,4	1129,6	2492,9	941,3	2077,4	1200.0
31	101,7	138,8	93,4	356	14,0	2150,8	4747	284,8	11,2	1613,1	3560,1	1075,4	2373,4	896,2	1977,9	1240.0
32	105,0	128,0	86,1	379	14,9	2048,2	4520	303,4	11,9	1536,1	3390,2	1024,1	2260,2	853,4	1883,5	1280.0
33	108,2	118,2	79,5	403	15,9	1950,6	4305	322,7	12,7	1463,0	3228,8	975,3	2152,5	812,8	1793,8	1320.0
34	111,5	109,3	73,5	428	16,8	1857,8	4100	342,5	13,5	1393,4	3075,1	928,9	2050,1	774,1	1708,4	1360.0
35	114,8	101,1	68,0	454	17,9	1769,2	3905	363,0	14,3	1326,9	2928,5	884,6	1952,4	737,2	1627,0	1400.0
36	118,1	93,6	63,0	480	18,9	1684,6	3718	384,0	15,1	1263,4	2788,4	842,3	1858,9	701,9	1549,1	1440.0
37	121,4	86,7	58,3	507	20,0	1603,5	3539	405,7	16,0	1202,7	2654,3	801,8	1769,5	668,1	1474,6	1480.0
38	124,6	80,3	54,0	535	21,0	1525,8	3367	427,9	16,8	1144,4	2525,6	762,9	1683,7	635,8	1403,1	1520.0
39	127,9	74,4	50,1	563	22,2	1451,2	3203	450,7	17,7	1088,4	2402,0	725,6	1601,4	604,7	1334,5	1560.0
40	131,2	69,0	46,4	592	23,3	1379,3	3044	474,1	18,7	1034,5	2283,1	689,7	1522,1	574,7	1268,4	1600.0

1 inch = 25,4 mm | 1m = 3.28 ft | 1 lbs = 0,453 kg

- Tüv certification only valid for loading table above.
- Loading figures are only valid for static loads.
- Loading figures are only valid for single spans with supports at both ends.
- All static systems, other than single spans, need an individual structural calculation. Please contact a structural engineer or Prolyte for assistance.
- Loading figures are calculated according to and in full compliance with European standards (Eurocode).
- The self-weight of the trusses is already taken into account.
- Loading figures are only valid for the cross sectional orientation of the truss as shown by the icon in the loading table.
- The interaction between bending moment and shear force at the connection point is already taken into account.
- Truss spans can be assembled from different truss lengths.
- Read the manual before assembling, using and loading the truss.

Technical Specifications - D75T

Types	Tower truss
Alloy	EN AW 6082 T6
Main Chords	80 x 10 mm
Diagonal Members	40 x 3 mm
Coupling System	Pin / Fork connection

Structural data can be found at www.prolyte.com

D75T - Standard available Lengths and Codes

Metres	Feet	Code
0.50/1.00 m in 5 mm steps	0.82'/3.28', in 0.2' steps	
1,00	3.28	D75T-L100
2,00	6.56	D75T-L200
3,00	9.84	D75T-L300
3,85	12.62	D75T-L385
4,00	13.11	D75T-L400

Other Lengths on request

Photo: Rohr Autohaus-Optimierung, Germany. Project: Highlight Platz Grasser.

ADVERTISING TOWERS

Outdoor advertising is a perfect medium to bring products or messages to the attention of a large group. In close cooperation with Rohr Autohaus from Germany, Prolyte has developed a range of towers and pylons for this type of outdoor mass communication.

RELIABLE SUPPORT

Outdoor advertising towers or billboards that are constructed from truss require extra attention with regard to setup and structural calculations. Environmental factors such as wind force have to be calculated, and furthermore, the stability of the structure needs to be guaranteed.

Prolyte offers a range of standard sizes of triangular as well as square advertisement towers, which all comply with the applicable regulations and standards.

BASED ON STANDARD TRUSS SYSTEMS

The standard advertising tower supports from Prolyte consist of:

- Triangular towers up to 12 m in height constructed from H40V truss
- Triangular and square towers ranging from 6-10 m in height constructed from X30, H30 and H40 truss
- Standalone pylons up to 10 m in height constructed from S66 and S52 truss.

The three-sided advertising space amounts to 2,5 x 2,5 m per side.

3x3x6

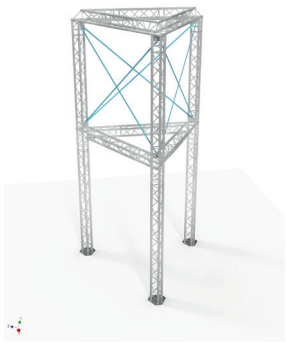

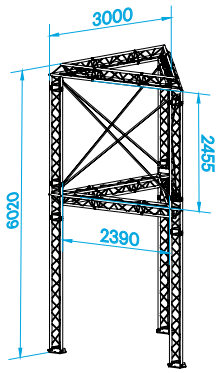

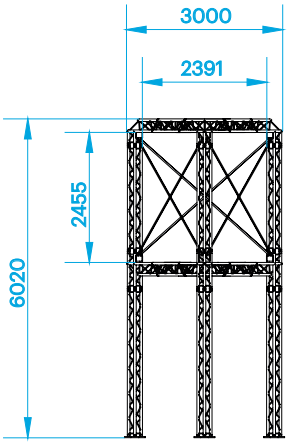

4x4x8

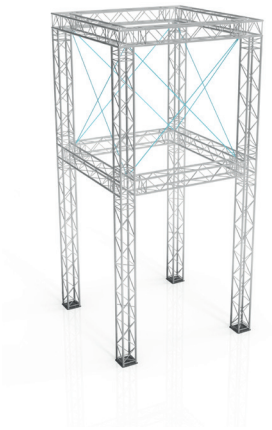

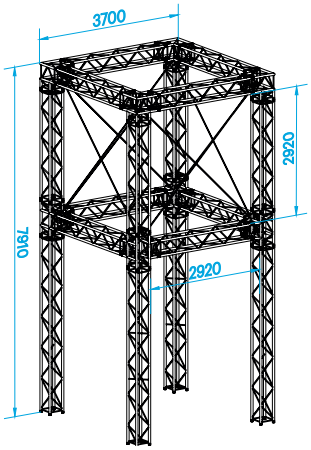

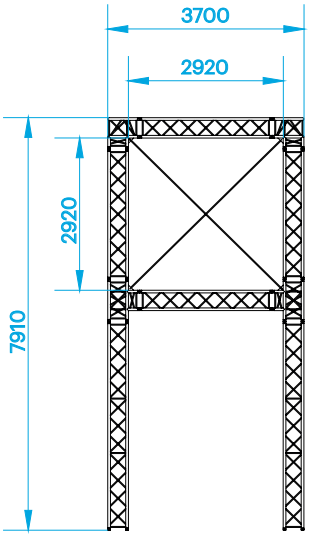

5x5x10

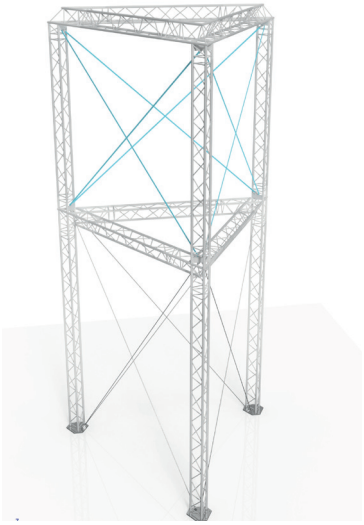

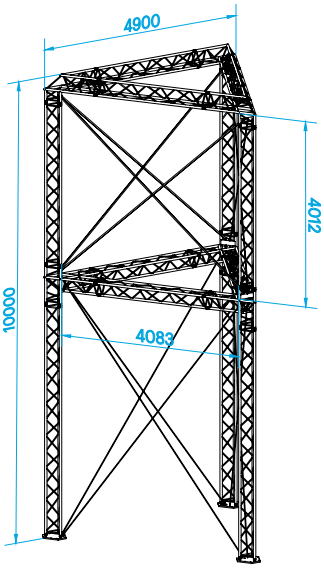

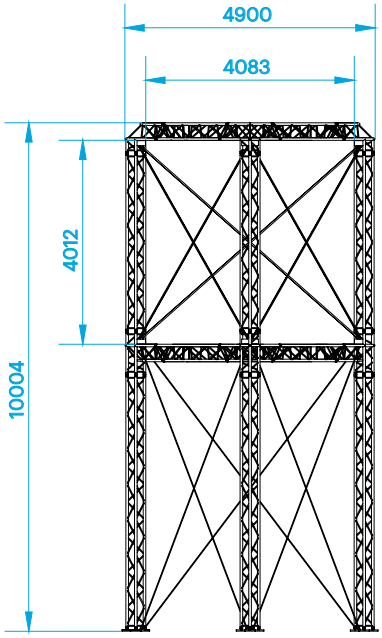

Photo: ProSound, South Africa.

OUTDOOR LED OR VIDEO SCREEN SUPPORT

With the ever-increasing use of outdoor LED or video screens, Prolyte has engineered the perfect solutions for hanging screens in an efficient and safe manner.
We have developed three standard screen support systems, based on the MPT, ST and CT towers. All constructions are provided with a complete set of calculations. Variations on the standard structures are available on request.

RELIABLE SUPPORT

LED Screen supports require extra attention with regard to set up and structural calculations. Environmental factors, such as wind force, have to be calculated, and furthermore, the stability of both the structure and the screen needs to be ensured.
All Prolyte screen supports comply with the applicable regulations and standards, including wind force resistance up to wind speeds of 28 m/s.

EACH SYSTEM HAS UNIQUE REQUIREMENTS

Due to the complex interaction of forces resulting from screen surface, wind speeds, system weight and required screen height, each system is unique with respect to the calculation of the complete construction. Requirements for larger spans, higher loading or added screen height need to be calculated. Prolyte's experienced engineering department is available to assist customers with calculations and specific construction requirements.

BASED ON STANDARD TRUSS SYSTEMS

LED screen supports from Prolyte consist of standard products from both the tower and truss range. There is no need to invest in special parts. Screen supports for a wide range of applications can be configured using your standard rental stock. For more information, please contact Prolyte's Internal Sales.

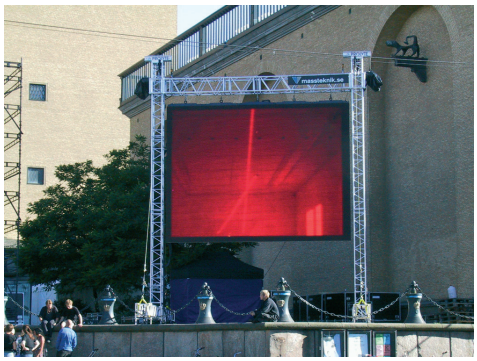

Technical specifications - Led / video screen	
Allowable loading ranging from	500 - 5000 kg
Screen surface ranging from	6 m^2 to 60 m^2
Max. Windspeed	13,8 to 28 m/s
Design Standards	EN 13814

LED Screen 5x3M

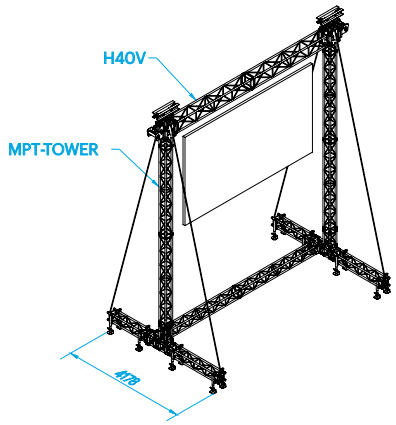

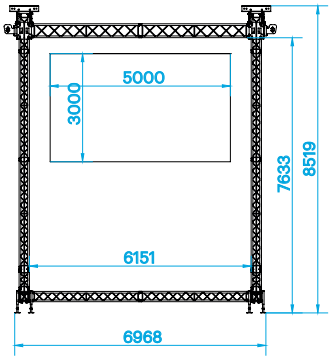

LED Screen 6x4M

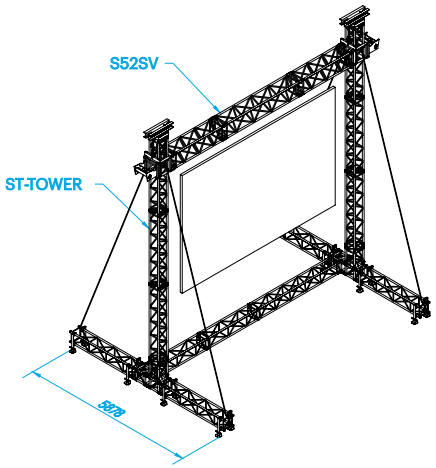

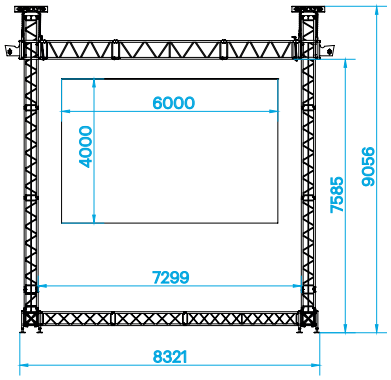

LED Screen 10x6M

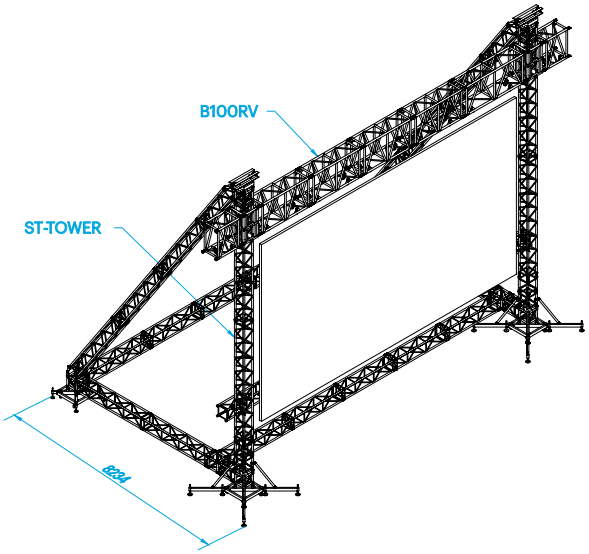

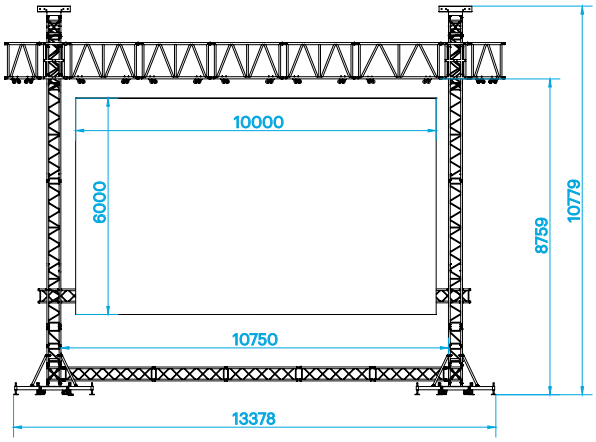

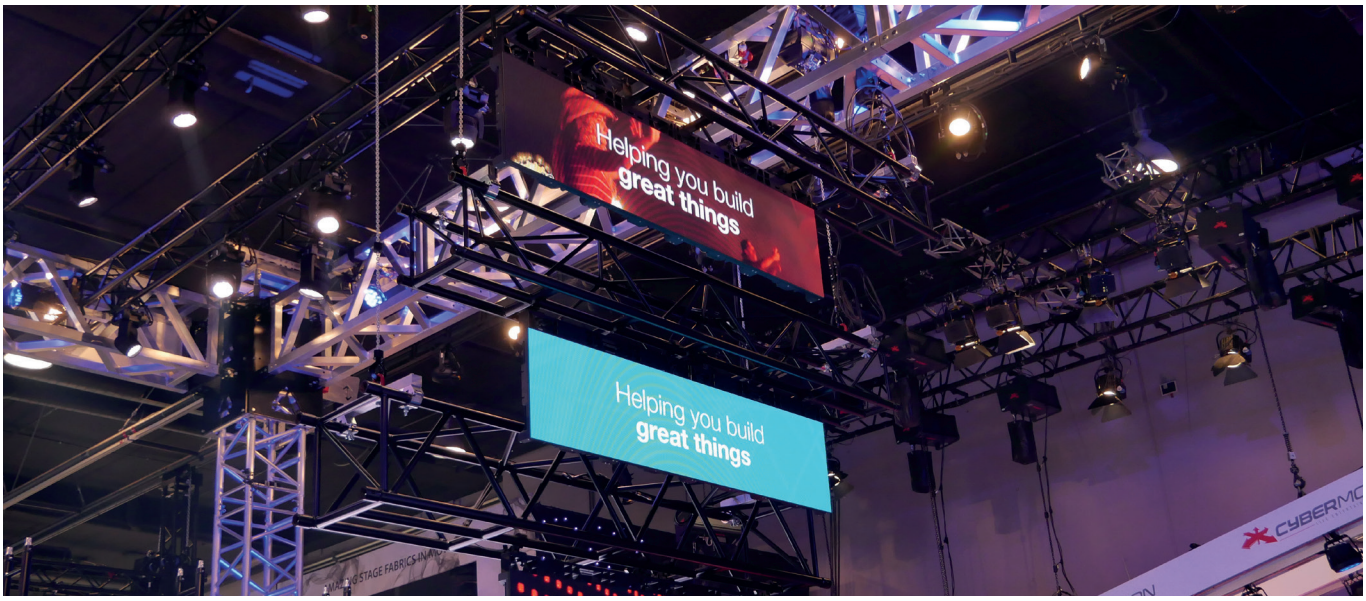

Photo: Prolyte, Prolight + Sound

LSU SERIES - LED SCREEN SUPPORT UNIVERSAL SERIES

MIDDLE BEAM TRUSS

If you want to fly your LED system, you have the choice of two truss types. All of these trusses are equipped with a middle beam.
- H40V-MB
- S52SV-MB

Both truss types are fully compatible with the regular truss H40V/S52 series and can be combined in one grid.
The extra middle beam in the bottom surface will guarantee safe and easy suspension of your LED wall. Keeping the total load in the middle of your truss section, thereby avoiding unbalanced loading or using the truss in a diamond shape.

H40V-MB

H40 MB Series truss is constructed of main chords (48 x 3 mm) and diagonals (20 x 2 mm). Equipped with the CCS6 conical coupling system, the H40 MB truss is fast and easy to assemble. The H40 offers extra strength, next to its flexible application possibilities and is the ideal solution for the event or exhibition market.

Advantages of H40V-MB

- Fast and easy assembly
- Lightweight system
- Versatile application
- Cross bracing
- Can be combined with standard H40V
- Load in the centralised in the truss section

Top view

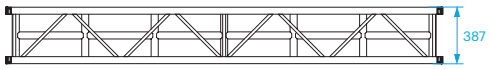

Side view

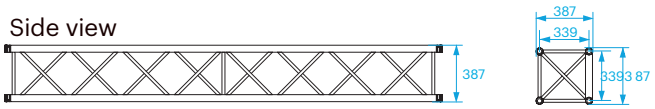

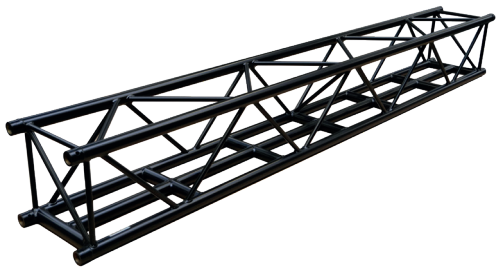

Technical Specifications – H40V-MB

Type	H40V-MB
Alloy	EN AW 6082 T6
Diagonal Members	48 x 3 mm
Braces	20 x 2 mm
Coupling System	CCS6

Standard available lengths and codes H40V-MB

Metres	Feet	Code
1,00	3,28	H40V-L100-MB
1,50	4,92	H40V-L150-MB
2,00	6,56	H40V-L200-MB
2,50	8,20	H40V-L250-MB
3,00	9,84	H40V-L300-MB

S52SV-MB

S52-MB Series truss is constructed of main chords (50 x 4 mm) and diagonals (30 x 3 mm). Equipped with the CCS7 conical coupling system, the S52-MB truss is fast and easy to assemble. The S52 truss offers a strong truss with a very high loading capacity. The clever pin orientation guarantees fast and foolproof assembly.

Top view

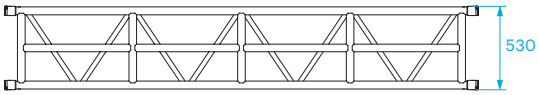

Side view

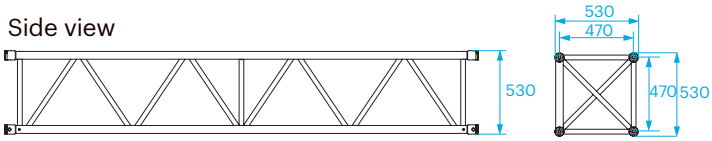

Advantages of S52-MB

- Clever pin orientation
- Fast and easy to assemble
- Very high loading capacity
- Can be combined with standard S52V or S52SV truss series
- Load in the centralised in the truss section

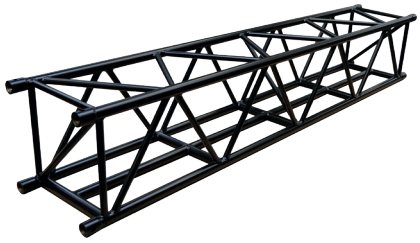

Technical Specifications – S52SV MB series

Type	S52SV MB
Alloy	EN AW 6082 T6
Main Chords	50 x 4 mm
Diagonal Members	30 x 3 mm
Coupling System	CCS7

Standard available lengths and codes S52SV MB series

Metres	Feet	Code
1,00	3,28	S52SV-L100-MB
1,50	4,57	S52SV-L150-MB
2,00	6,56	S52SV-L200-MB
2,50	8,20	S52SV-L250-MB
3,00	9,84	S52SV-L300-MB

H40V-MB - Allowable Loading on the middle beam

		MAXIMUM ALLOWABLE POINT LOADS			
		Centre Point Load			
SPAN		CPL		DEFLECTION	
m	ft	kgs	lbs	cm	inch
3	9,8	300,0	201,9	0,7	0,28
4	13,1	290,0	195,1	1,3	0,51
5	16,4	230,0	154,8	2,0	0,79
6	19,7	190,0	127,8	2,9	1,14
7	23,0	160,0	107,7	4,0	1,57
8	26,2	130,0	87,5	5,2	2,05
9	29,5	100,0	67,3	6,5	2,56
10	32,8	80,0	53,8	8,1	3,19
11	36,1	60,0	40,4	9,8	3,86
12	39,4	50,0	33,6	11,6	4,57
13	42,6	40,0	26,9	13,7	5,39
14	45,9	40,0	26,9	15,8	6,22
15	49,2	30,0	20,2	18,2	7,17
16	52,5	30,0	20,2	20,7	8,15
17	55,8	20,0	13,5	23,4	9,21
18	59,0	20,0	13,5	26,2	10,31
19	62,3	20,0	13,5	29,2	11,50
20	65,6	10,0	6,7	32,3	12,72

1 inch = 25,4 mm | 1m = 3.28 ft | 1 lbs = 0,453 kg

Without deflection limit

S52SV MB - Allowable Loading on the middle beam

		MAXIMUM ALLOWABLE POINT LOADS			
		Centre Point Load			
SPAN		CPL		DEFLECTION	
m	ft	kgs	lbs	cm	inch
3	9,8	250,0	168,2	0,5	0,20
4	13,1	250,0	168,2	0,9	0,35
5	16,4	250,0	168,2	1,5	0,59
6	19,7	250,0	168,2	2,1	0,83
7	23,0	250,0	168,2	2,9	1,14
8	26,2	250,0	168,2	3,7	1,46
9	29,5	250,0	168,2	4,7	1,85
10	32,8	230,0	154,8	5,9	2,32
11	36,1	190,0	127,8	7,1	2,80
12	39,4	150,0	100,9	8,4	3,31
13	42,6	130,0	87,5	9,9	3,90
14	45,9	110,0	74,0	11,5	4,53
15	49,2	90,0	60,6	13,2	5,20
16	52,5	80,0	53,8	15,0	5,91
17	55,8	70,0	47,1	16,9	6,65
18	59,0	60,0	40,4	19,0	7,48
19	62,3	50,0	33,6	21,1	8,31
20	65,6	50,0	33,6	23,4	9,21

1 inch = 25,4 mm | 1m = 3.28 ft | 1 lbs = 0,453 kg

Without deflection limit

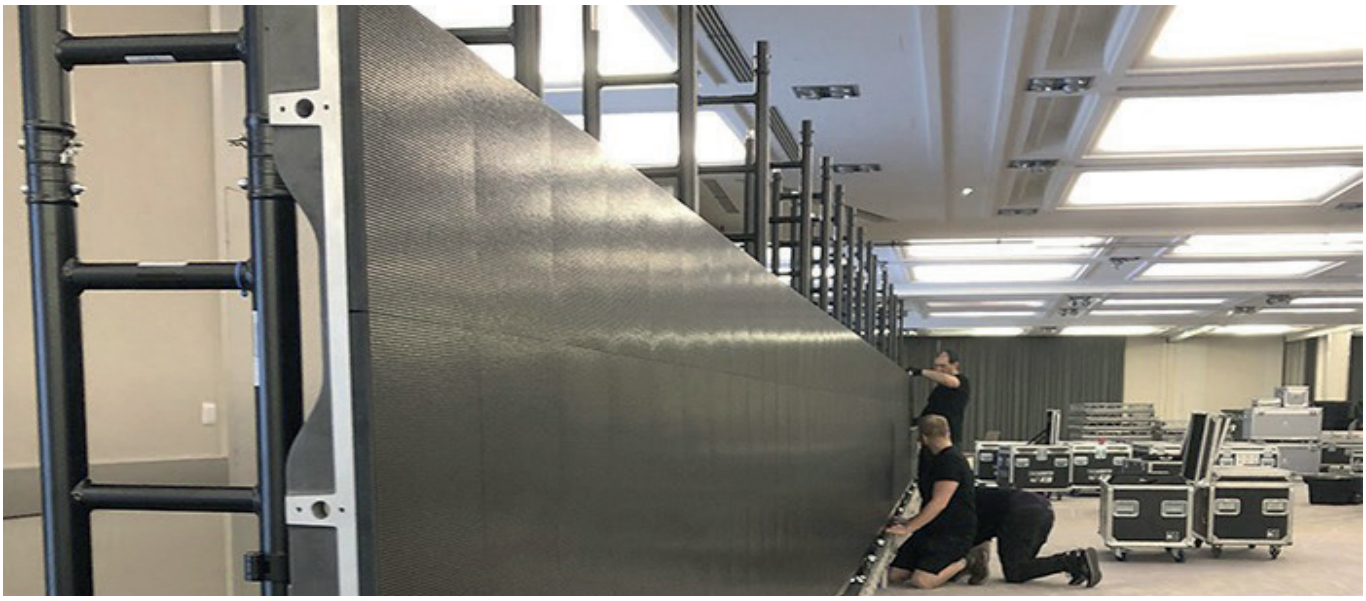

Photo: IPS

LSU SERIES - LED SCREEN SUPPORT UNIVERSAL SERIES

Ground Stack LED Screen Support System

Building your LED screen from ground level is now easier than ever. No matter what type of screen you have, Prolyte offers a universal solution - the LED Stack System. This system is a combination of a base-unit, connection bar and ladder truss, which creates a very stable system to support your LED screens in various configurations. You're provided with flexibility in both height and width.

A side-entry clamp

With the universal connection plate mounted, it is possible to mount almost any type of LED panel quickly and easily.

Connection bars and adjustable feet

By using longer connection bars, you can easily extend your screen with another row of panels. Using the adjustable feet in the front and back of the base unit, you can safely level the system, so your screen is completely straight.

Technical specifications - Ground Stack LED Screen Support	
All items are standard coated black (RAL9005)	
Base unit: 50 x 50 mm profile	
Coupling system: CCS6	
Adjustable M12 spindles	
H30L Ladder truss with 30 x 3mm straight bracing	
Available ladder truss lengths	• PC-LSU-30L-L050-RAL9005 • PC-LSU-30L-L075-RAL9005 • PC-LSU-30L-L100-RAL9005
Available connection bar lengths	• PC-LSU-CONNB- L100-RAL9005, 1 m length • PC-LSU-CONNB- L150-RAL9005, 1,5 m length • PC-LSU-CONNB- L200-RAL9005, 2 m length
Available LED panel adapters	PC-LSU-ADAP-03-RAL9005, panel adapater for panels with M8, M10 and M12 bolts
Ballast needed	• 2 m high screen – 17 kg/m • 4 m high screen – 130 kg/m

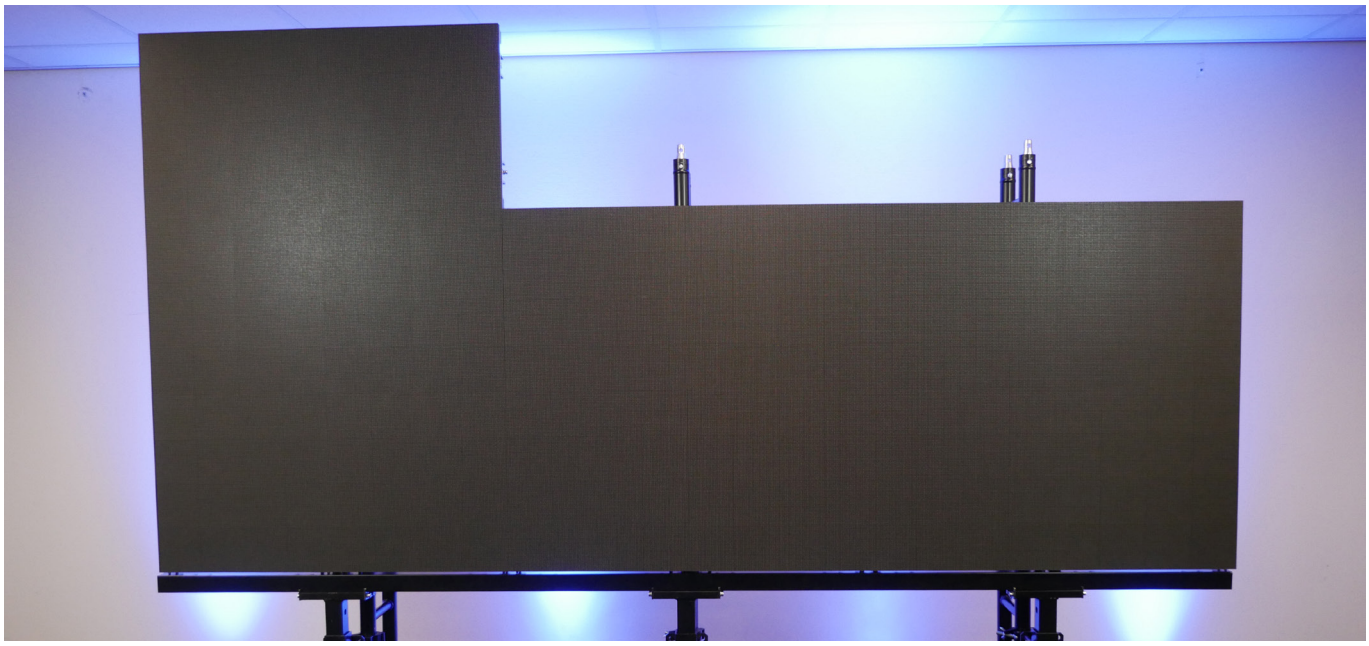

Photo: Prolyte

LSU SERIES - LSU RAISED

The adjustable leg is a support which enables to start your LED wall from a higher level than ground level. The leg will rest on the ground base and can be attached to the ladder truss with the standard led panel adapter.
The leg support is adjustable in height between the 90 and 130cm height and can be adjusted every 10cm. The SM-A-LP16 locking pin with its selflocking mechanism
will secure the leg. The principle with the connection bars is equal to the base unit.
The leg will come standard in a powdercoated black color.

Connection bars and adjustable feet

- By using the adjustable feet in the front and back of the base-unit, you can safely level the system, so your screen is completely straight.
- By using longer connection bars, you can easily extend you screen with another row of panels.
- Using the adjustable feet in the front and back of the base-unit, you can safely level the system, so your screen is completely straight.

Adjustable leg support:	• PC-LSU-SUPP-90130-RAL9005

Photo: Prolyte

LSU SERIES - LSU CURVED

Prolyte has extended the LSU series with a range of adapters to create curved screens. The angled connections bars will be the base of your LED wall and are available in a length of 100 and 150cm. They also can be used in combination with the straight versions.
The connection between the led panel and the ladder truss will be made by the LED panel adapter with special angled plates. The plates re available in 2.5, 5, 7.5 and 10 degrees and can be ordered separately from the adapter. The plates will fit most of all available brands.
Other options will be available on request.

Angled connection bars:

PC-LSU-CONNB-L100-025-RAL9005	• LED STACK CONNECTION BAR LENGTH 100CM, 2,5DGR RAL9005
PC-LSU-CONNB-L150-025-RAL9005	• LED STACK CONNECTION BAR LENGTH 150CM, 2,5DGR RAL9005
PC-LSU-CONNB-L100-050-RAL9005	• LED STACK CONNECTION BAR LENGTH 100CM, 5DGR RAL9005
PC-LSU-CONNB-L150-050-RAL9005	• LED STACK CONNECTION BAR LENGTH 150CM, 5DGR RAL9005
PC-LSU-CONNB-L100-075-RAL9005	• LED STACK CONNECTION BAR LENGTH 100CM, 7,5DGR RAL9005
PC-LSU-CONNB-L150-075-RAL9005	• LED STACK CONNECTION BAR LENGTH 150CM, 7,5DGR RAL9005
PC-LSU-CONNB-L100-100-RAL9005	• LED STACK CONNECTION BAR LENGTH 100CM, 10DGR RAL9005 • LED STACK CONNECTION BAR LENGTH 150CM, 10DGR RAL9005

Angled adapter plates:

PC-LSU-ADAP-02-RAL9005	160	• TRUSS TO LED PANEL ADAPTER, NO PLATE RAL9005
PC-LSU-ADAP-04-025RAL9005	160	• LED PANEL MOUNTING PLATE 2,5DGR RAL 9005
PC-LSU-ADAP-04-050RAL9005	160	• LED PANEL MOUNTING PLATE 5DGR RAL 9005
PC-LSU-ADAP-04-075RAL9005	160	• LED PANEL MOUNTING PLATE 7,5DGR RAL 9005
PC-LSU-ADAP-04-100RAL9005	160	• LED PANEL MOUNTING PLATE 10DGR RAL 9005

Photo: Studio Berar

PROLYTE
Feel. Fantastic.

Roof System

Prolyte offers innovative, solidly engineered solutions for constructing complex structures or roof systems for any event. Whether your event is an intimate social gathering or a massive outdoor concert, your stage design should be robust, stylish, and ready to work in any type of environment; regardless of the size or demands of your application, Prolyte offers what you need. With Prolyte you are asserted of a long-term solution next to a cost-efficient investment.

Consistent quality

Prolyte are highly regarded throughout all sectors of the events and entertainment markets, a reputation earned by consistently delivering safe and solid constructions that adapt to all types of applications. In addition, Prolyte users enjoy unparalleled support with comprehensive technical assistance and training. Through product selection to build-up, training is an integral part of the delivery procedure.

A solid investment

Prolyte offers tower and roof structures in various sizes and shapes. Additionally, custom constructions can be requested. All Prolyte structures are designed, engineered and manufactured to the latest standards in the industry. Setting high standards in stage design, Prolyte are renowned for their easy set-up, short building times, compact transport size and high priority to safety. Where safety for performers and audiences is paramount, Prolyte are a natural choice.

Photo: Starlight AB, project: Cheek at Helsinki Olympic Stadium

PROVEN QUALITIES

Prolyte are based on standard truss, providing economic packages. Our Roof Systems are modular and versatile; each roof has several set-up possibilities. They are quick and easy to assemble, saving you building time and labour costs. They have compact loading volumes, saving on shipping and storage costs. Prolyte are integrated in our complete range of truss; you only need to buy the special parts, upgrading or downsizing your roof system as required.

This approach has two main advantages:

- You can invest in a roof system on a step-by-step basis
- Out of season, the components can be added to your regular truss rental stock, thereby increasing the economic value of the system as a whole

DESIGN CRITERIA

In developing design and construction procedures at Prolyte, customer needs and overall satisfaction comes first. Our worldwide reputation has been built by providing systems that are ideally suited to the needs and requirements of the user. Providing comprehensive training and build-up procedures gives us access to constant feedback from the market, which in turn helps direct our design and construction methodology. Equally important, products and designs only work when they are proven in daily practice. Having extensive hands-on experience makes our engineers aware of the practical implications of their engineering work. This fact is evident in the design of Prolyte Road proof. Tested. Safe. Approved. Loading data - as featured in this brochure - are based on uniformly distributed loads (UDL). Exact loading data will depend on position and weight per point. Please make sure to check the exact loading data before you apply any load.

Prolyte roof systems are designed and manufactured in compliance with:

EN 1990 / EC0	Basics of structural design
EN 1991 / EC1	Actions on structures
EN 1993 / EC3	Design of steel structures
EN 1999 / EC9	Design of aluminum structures
EN-13782	Temporary structures - Tents – Safety
EN-13814	Fairground and amusement park machinery and structures – Safety
EN-12385	Steel wire ropes

Photo: Interstage, The Netherlands

CHALLENGE US

The specific products shown here may not be suited to your particular needs. Working with creative teams can be very challenging at times, but Prolyte is always receptive to new ideas. We welcome opportunities to be put to the test. Although often it seems like we have to make the impossible happen, we always succeed in finding a fitting solution. And, what is more, we never compromise on what we know is important. All of our custom roofs are designed following the same strict design criteria, thereby offering consistent quality and safety.

STANDARD ROOF SYSTEM COMPONENTS

- Standard truss
- Standard tower systems (MPT, ST or CT)
- Special parts (such as gable parts or tent and keder profiles)
- Additional canopy or side-walls

DEFINITION

Mobile roof structures are predominantly used in temporary applications. They are designed and constructed to facilitate transportation and regular building and dismantling sessions at different locations.

APPLICATIONS

Mobile roof structures are mainly used in the event market, which can be defined as (but not restricted to) all activities for leisure and sports, arts and cultural performances, amusement, or presentation of products.

Examples include:

- Product presentations
- Theatre shows, musicals and operas
- Concerts, festivals and fairgrounds
- Exhibitions and trade shows
- Celebrations and parties
- Conventions and large-scale meetings.

STANDARDS

Most countries apply no specific standards in reference to temporary building constructions. When defined, they usually comply with the local building regulations and therefore to standards on permanent constructions. This is a constant source of problems and discussion. Prolyte has chosen to comply to the strictest regulations that apply.

WHAT IS TEMPORARY?

How do we define temporary? Days? Weeks? Months? The publication "Temporary Demountable Structures" mentions "generally no more than 28 days". But what if this is in the middle of storm season? How temporary is a stage build for seasonal use? What are the risks of building a stage when rough weather is forecast? By what measure can we predict future circumstances? Each engineer should be aware of the possible risks and dangers beforehand, and should make decisions based on a case--by-case evaluation.

NEED TO KNOW MORE?

Please go to www.prolyte.com for more technical information on Roof Systems. In the Prolyte BlackBook (technical background information) we provide more in-depth technical knowledge on roof and stage structures and their application.

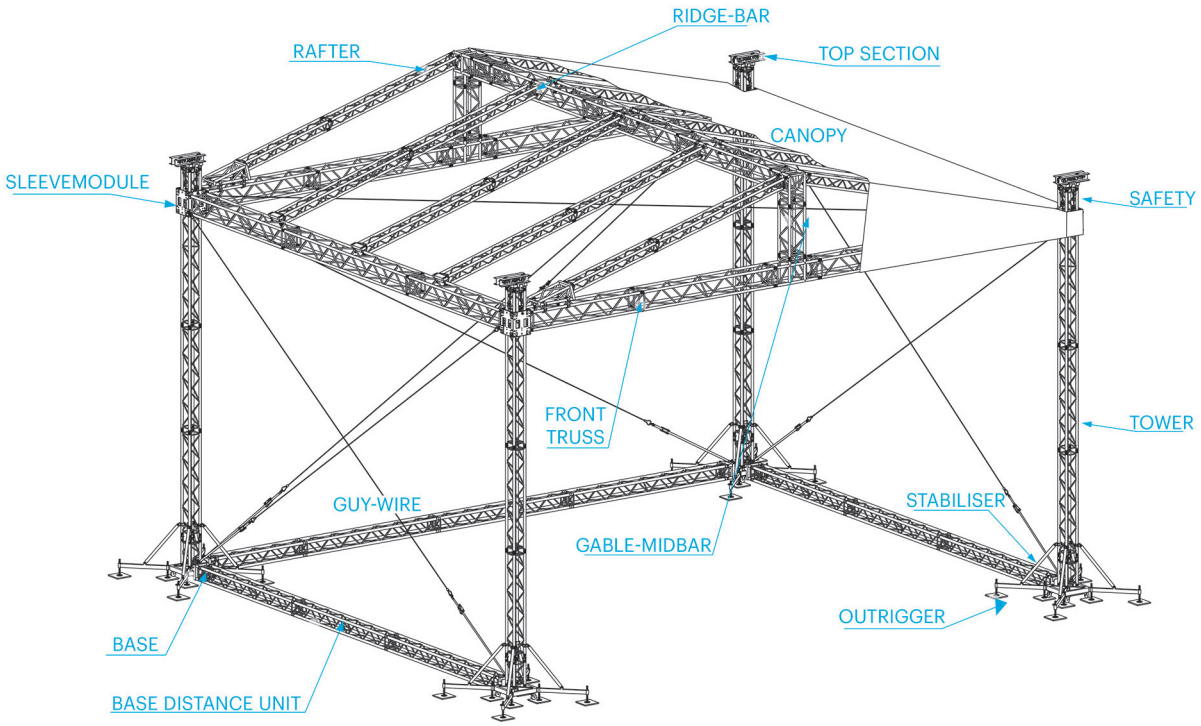

ANCHOR
Fixed point used to withstand the tension force from the guy-wires, which absorb the horizontal loading of the roof system. The anchor should be tested or certified.

BALLAST
The amount of weight applied to a roof structure to withstand wind forces.

BASE
The tower base section transfers the vertical (axial) load from the tower to the ground. A number of screw jacks on the outriggers allow for exact horizontal placement of the base section, and enable exact vertical placement of the towers.

BASE DISTANCE UNIT (BASE-BRACERBAR)
Compression braces between two base sections - absorbing the horizontal forces, which result from internal guy-wires.

CANOPY
The actual roof cover. Canopies should have accurate water drainage characteristics in order to prevent water traps. In most countries canopies have to comply with fire protection regulations.

GABLE
Front view of a triangular roof structure.

GABLE-MIDBAR
The central vertical part in the gable, connecting the ridge-bar ends to the centre of the horizontal gable beam.

GUY-WIRE
Steel wire bracing added to make the entire system rigid, and to transfer horizontal loads from the top of the system to the base. As a result, the towers will undergo an axial loading and no bending forces. The use of polyester ratchet straps as tensioning devices is prohibited by fire safety regulations in some countries.

RAFTER
A structural member of the roof system designed to carry the canopy loading.

RIDGE-BAR
The highest horizontal part of a triangular shaped roof.

SAFETY
A double suspension point that should be used to replace the chain of the hoist, once the roof is at trim height.

SLEEVE MODULE
Corner or connection piece that fully encloses the tower. The sleeve module has a set of internal guidance wheels that prevent friction of metal to metal in its vertical movement.

SCRIM
Special fabric or cloth used to close the sides or sound wings of the roof structure. The scrim is often painted or printed with special decorations. Scrim should be fire-retardant, have good acoustic characteristics and be wind permeable.

STABILISER/OUTRIGGER
Bracing part of a single tube that connects the tower to the outrigger, thereby shortening the buckling length of the tower.

TOWER ('MAST', 'COLUMN')
The tower or mast section transmits the roof weight from the top-section into the base.

TOP SECTION
The highest part of the mast, transferring the forces from the chain hoist to the tower.

CANOPY

Material
All Roof systems have canopies and side-walls made of fire-retardant PVC material. This material is known as M2 (France) or B1 (Germany DIN 4102).

Colour
Standard canopies are grey on the outside and black on the inside. Other colours are available on request.

Weight
The average weight of the canopy cover is 0,8 kg/m². For the larger roof structures, the canopy is delivered in separate pieces in order to facilitate handling and transportation.

Assembly
Ratchet straps are used to tension the canopy. These ratchets are attached to the canopy using a pipe, which fits in the side of the canopy. This method guarantees even and tight fitting of the canopy over the truss structure in order to facilitate rainwater drainage. The position and resulting tension from the ratchets is calculated as an extra load in the overall calculations.

Side-walls
The side-walls can be closed with the use of black scrim. Please make sure to use the right cf factor in order to guarantee sufficient wind permeability. For most roofs the side-walls have to be removed above certain wind speeds.

Options
- Transparent or coloured canopies and side-walls
- Built-in rain drainage system
- Repair kit
- Flight cases

BALLAST

Ballast is the additional weight needed to prevent the roof structure from being blown away as a result of wind forces. Ballast also protects against wind pressures, sliding or other hazards. Whatever type of ballast you use, it is essential that the ballast be fixed to the towers at all times. The required ballast weight can be different for each tower. Often the front towers of the structure require higher weights than the middle or rear towers.
The choice of the proper type of ballast is not easy. Environmental conditions are of great importance. The nature of soil, as well as access to ballast materials, commonly water or sand - and transportation availability are determining factors. Possible ballast types include:

- Water tanks
- Concrete plates
- Guy-wires in combination with anchors
- Steel tanks
- Sand bags

CHAIN HOISTS

Chain hoists are used to raise and lower the entire roof structure. The use of electrical chain hoists guarantees an even movement of the main grid. We recommend slow travel of the whole structure; the lifting speed of the hoist should not exceed 4m/minute. All hoists must comply with Protection Class IP 54. Hoists should be disconnected and replaced by safeties once the grid is at trim height. For optimum safety we strongly advise use a load monitoring system for large or complex roof structures.

DO

- Get regular on-site weather information updates
- Use wind sensors to measure local/on-site wind speeds (place them at 10 m. height min.)
- Inform your crew beforehand on safety procedures in case of emergency situations like unexpectedly high wind speeds (see BSR E1.21- draft; Operations Management Plan).
- Use approved fire retardant canopies and scrims only
- Use scrim with cf factor reference only
- Make sure towers are exactly centred (out of plumb ratio should be less than 0,5%)
- Apply guy-wires at all times
- Make sure your construction is properly grounded

DO NOT

- Lift your roof to trim height without proper ballast provisions applied
- Use material in poor condition
- Allow loads to be suspended before knowing their exact weight and size
- Exceed the limits of the structural report
- Build roof structures on unstable grounds
- Leave your roof system suspended from a hoist
- Lift a roof to trim height when wind speed surpasses 7,9 m/second

Photo: Giovanni Eekels Verhuur BV, The Netherlands

SYSTEM DESCRIPTION

The Arc Roof is a fixed construction. The 6 x 4 m and 8 x 6 m are based on H30D inward-curving trusses that are mounted to side masts. Special corners connect the arches to the main grid. The 10 x 8 Arc Roof is based of H30V Curved trusses that are mounted to the side mast. Boxcorners and special attachments connect the arches to the main grid. Different configurations are made possible by simply changing the arches. The arched trusses have a keder profile on top for fitting the canopy.

BASIC TRUSSING

Tower – MPT base sections
H30V truss
Grid – H30D arched truss - with keder profile or
H30V arched truss - with keder profile

INCLUDING

- Tension gear and steel wires
- Comprehensive building manual
- Structural report

ROOF STRUCTURE		
Towers		Portal structure, MPT base sections and H30V truss
Main grid	6 x 4; 8 x 6	H30V truss and welded corners; H30D Arc sections
	10 x 8	H30V truss and arc sections; boxcorners + special attachments

TECHNICAL SPECIFICATIONS - ARC ROOF	
Dimension	• 10 x 8 m (32'9" x 26'3") • 8 x 6 m (26'3" x 19'8") • 6 x 4 m (19'8" x 13'1")
Loading capacity	• 10 x 8 m approx. 2450 kg • 8 x 6 m approx. 1950 kg • 6 x 4 m approx. 1800 kg
Total weight	• 10 x 8 m approx. 1200 kg • 8 x 6 m approx. 800 kg • 6 x 4 m approx. 600 kg
Transportation volume	• 10 x 8 m approx. 32 m³ • 8x 6 m approx. 20 m³ • 6 x 4 m approx. 16 m³
Max. wind speed	28,4 m/second, 63,3 mph

Advantages
- Versatile application
- Easy to handle, quick setup
- Significant loading capacity
- Ideal for smaller events
- Extra options available

OPTIONS	
Canopy	side, back and top
Canopy colour	standard: outside grey, inside black (other colours possible)
Soundwings	Optional (yes, 1000 kg)
Ballast	several possibilities on request depending on construction. For example, water tanks, Concrete blocks.
Staging	Prolyte stage elements, EasyFrame B or Pro-beam combined with a scaffolding stage
Groundring	reduces ballast loading

Photo: Live Systems Ltd, UK. project: Tall Ships Races Festival in the Shetland Islands

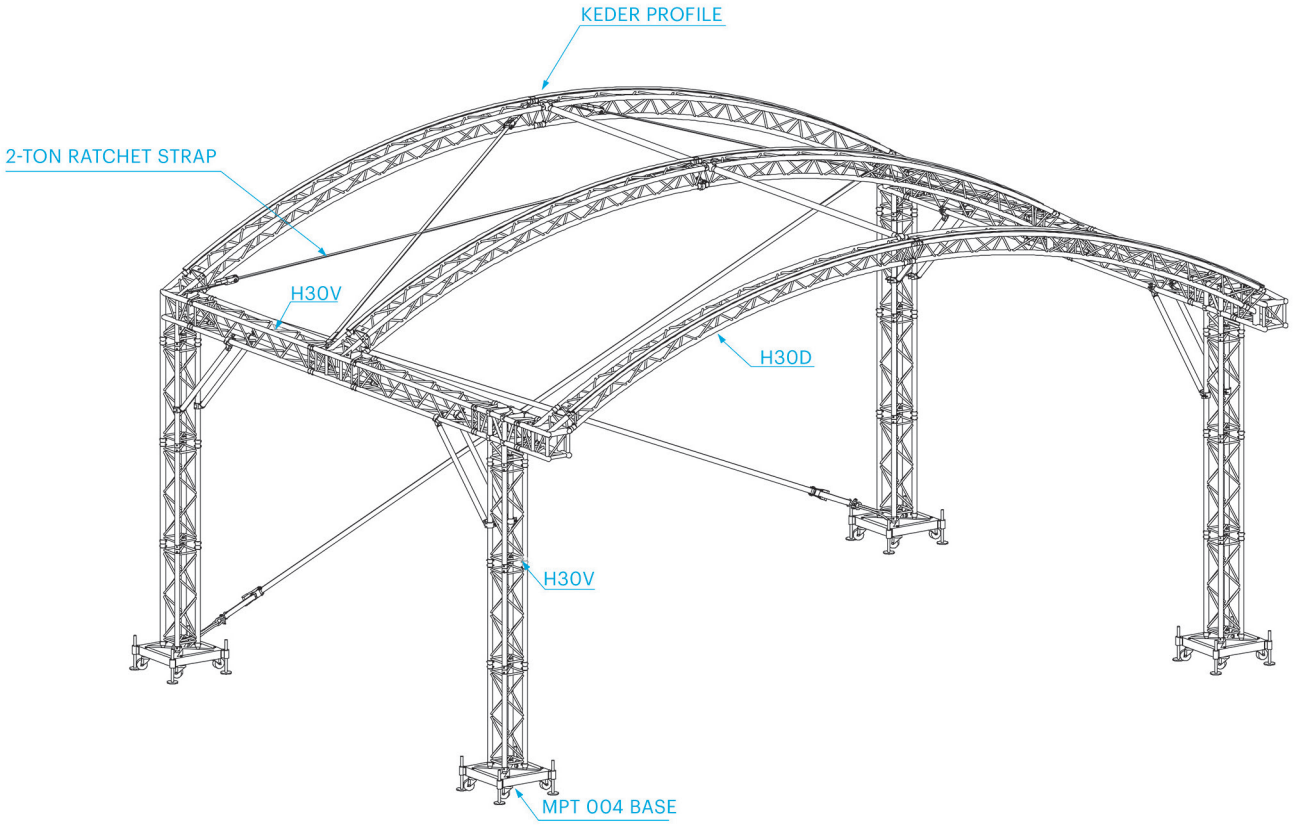

Front view - 8 x 6 m Arc

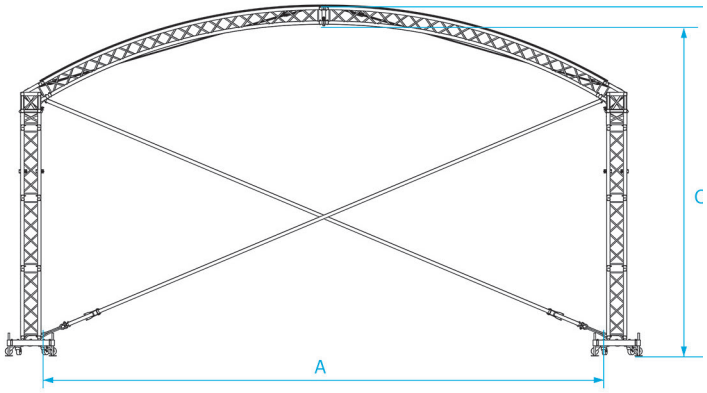

ARC ROOF SYSTEM	
10 x 8 m	4 Arcs
8 x 6 m	3 Arcs
6 x 4 m	2 Arcs

Side view - 8 x 6 m Arc

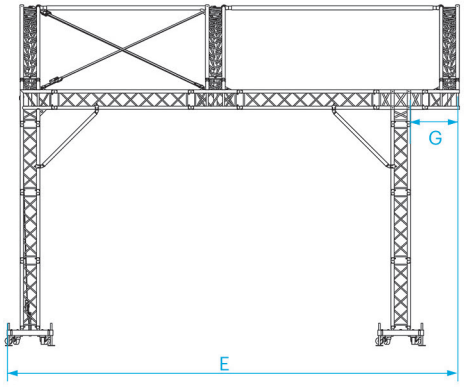

Top view - 8 x 6 m Arc

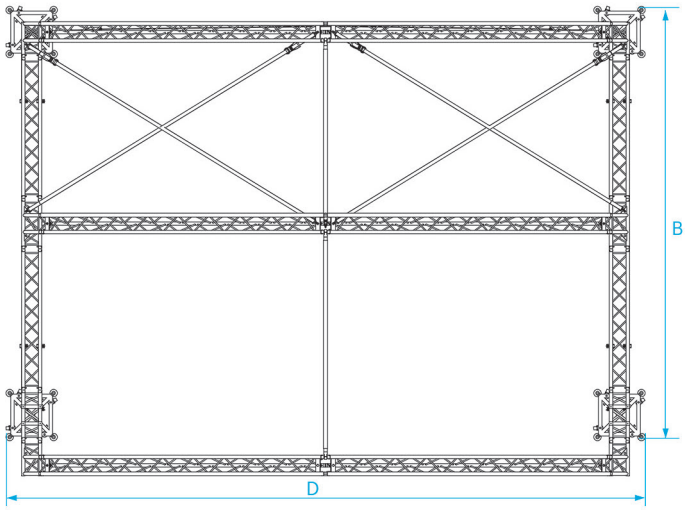

ARC ROOF SYSTEM		Inside						Overall							
Stage measurements		A		B		C		D		E		F		G	
10 x 8 m	32'9" x 26'3"	10,20 m	33'46"	7,14 m	23'43"	6,00 m	19'69"	10,79 m	35'40"	8,50 m	27'89"	6,32 m	20'73"	0,71 m	2'33"
8 x 6 m	26'3" x 19'8"	8,04 m	26'38"	5,14 m	16'86"	4,72 m	15'49"	8,60 m	28'22"	6,50 m	21'33"	4,99 m	16'37"	0,71 m	2'33"
6 x 4 m	19'8" x 13'1"	6,04 m	19'82"	3,43 m	11'25"	4,45 m	14'60"	6,60 m	21'65"	4,78 m	15'68"	4,72 m	15'49"	0,71 m	2'33"

Photo: DWR Distribution South Africa; project: MGG at Comic-Con Africa

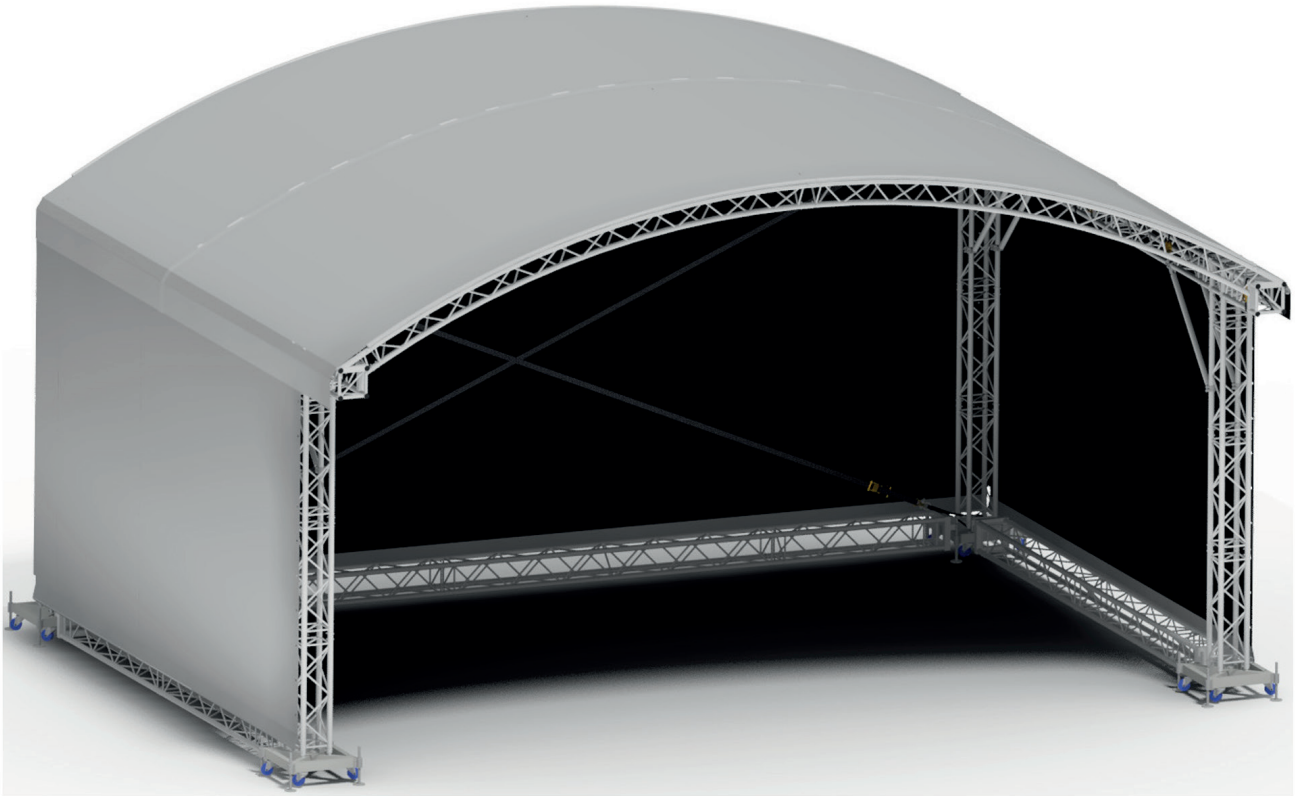

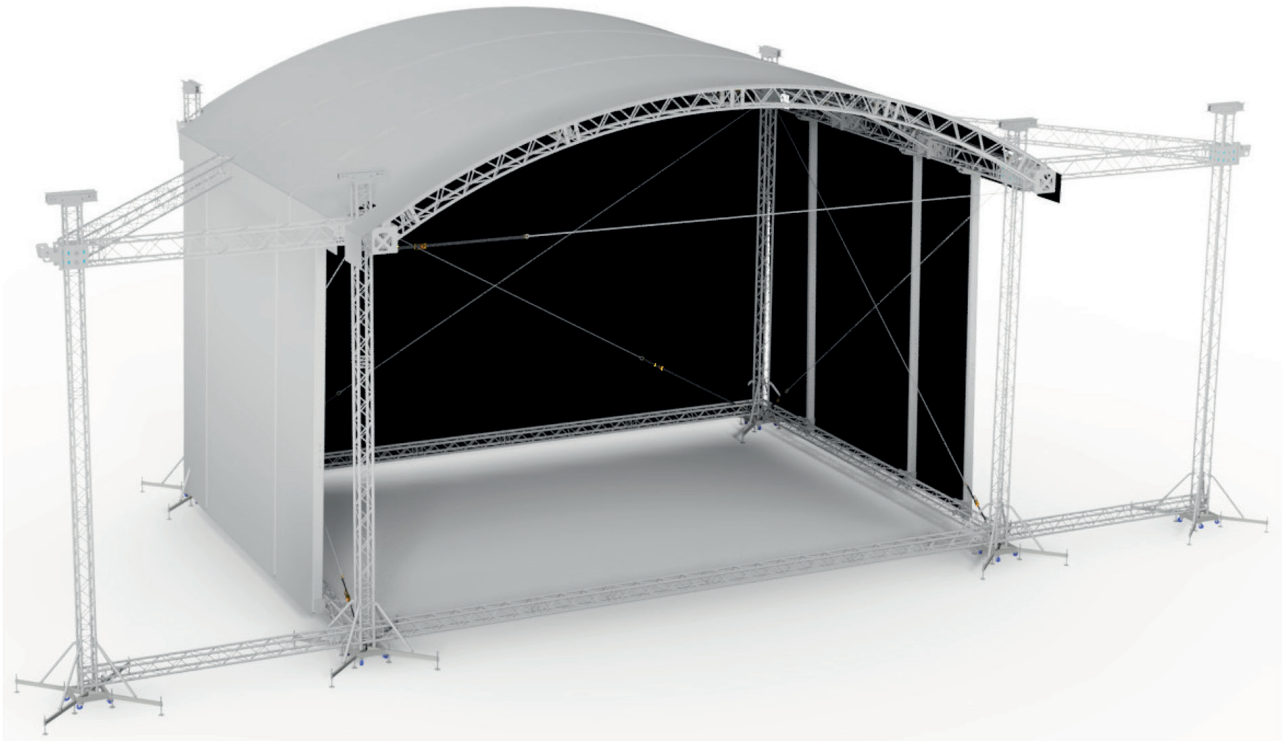

SYSTEM DESCRIPTION

The Arc-HT roof is based on the new HT tower, the grid is build out of H40V truss and the new HD-Boxcorner which optimizes the strength of the system. The arches are made out of H40V, with compression members in-between. The HT tower simplifies the dead hanging of the system, with its dead hang pin instead of a steel chain.

INCLUDING

- Tension gear and steel wires
- Structural report

ROOF STRUCTURE	
Towers	4x HT-Towers, Mast Sections of H30V Truss
Main grid	H40V Truss + H40V Arc Sections

TECHNICAL SPECIFICATIONS - ARC ROOF	
Dimensions	12 x 10 m (39'4" x 32'9") 10 x 8 m (32'9" x 26'3"), 8 x 6 m (26'3" x 19'8")
Loading capacity	12 x 10 m approx. 5360 g 10 x 8 m approx. 4720 kg 8 x 6 m approx. 2940 kg
Total weight	12 x 10 m approx.. 1950 kg 10 x 8 m approx. 1700 kg 8 x 6 m approx. 900 kg
Transportation volume	12 x 10 m approx. 40 m³ 10 x 8 m approx. 32 m³ 8x 6 m approx. 24 m³
Max. wind speed	28,4 m/second, 63,3 mph

Consult Prolyte for up-to-date information on loading capacity, wind speed, total weight and transportation volume in line with the latest regulations.

Advantages

- Easy to handle, quick setup
- High loading capacity
- Simplyfied dead hang system
- All standard components
- Extra options

OPTIONS	
Canopy	Side with keders, back and top
Canopy colour	Standard: outside grey, inside black (other colours possible)
Soundwings	Optional (yes, loading 1000 kg each)
Ballast	Several possibilities on request depending on construction. For example, water tanks, concrete blocks
Staging	Prolyte stage elements, Probeam combined with a scaffolding stage
Groundring	Yes, reduces ballast loading

Front view - 10 x 12 m Arc

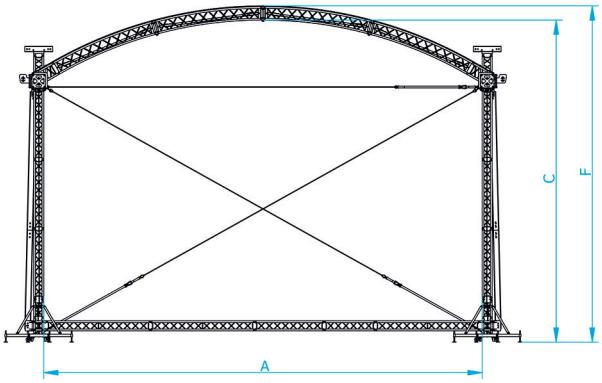

ARC - HT ROOF SYSTEM	
10 x 8 m	4 Arcs
8 x 6 m	3 Arcs
6 x 4 m	2 Arcs

Side view - 10 x 12 m Arc

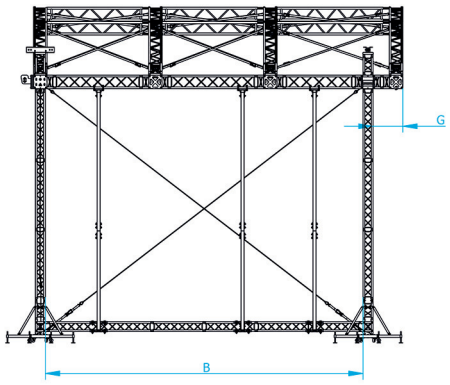

Top view - 10 x 12 m Arc

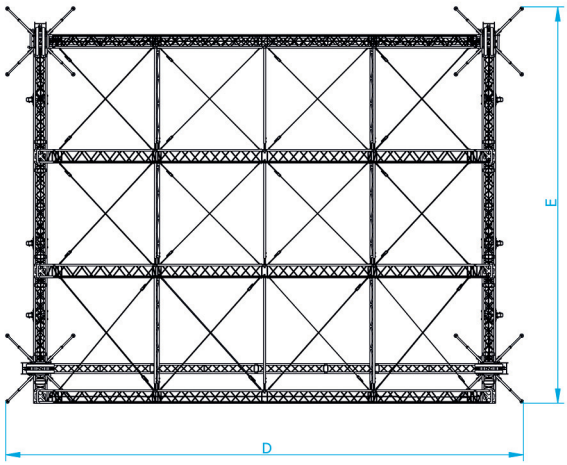

ARC-HT ROOF SYSTEM		Inside						Overall							
Stage measurements		A		B		C		D		E		F		G	
12 X 10 m	39'37'' x 32'9''	12,63 m	14'44''	9,15 m	30'00''	9,29 m	30'48''	14,91 m	48'93''	11,44 m	36'09''	9,70 m	31'82''	0,86 m	2'82''
10 x 8 m	32'9'' x 26'3''	10,63 m	34'88''	7,14 m	23'43''	6,00 m	19'69''	10,79 m	35'40''	8,50 m	27'89''	6,32 m	20'73''	0,71 m	2'34''
8 x 6 m	26'3'' x 19'8''	8,63 m	28'31''	5,84 m	19'17''	6,26 m	20'54''	10,91 m	35'79''	8,12 m	26'64''	6,66 m	21'85''	1,36 m	4'46''

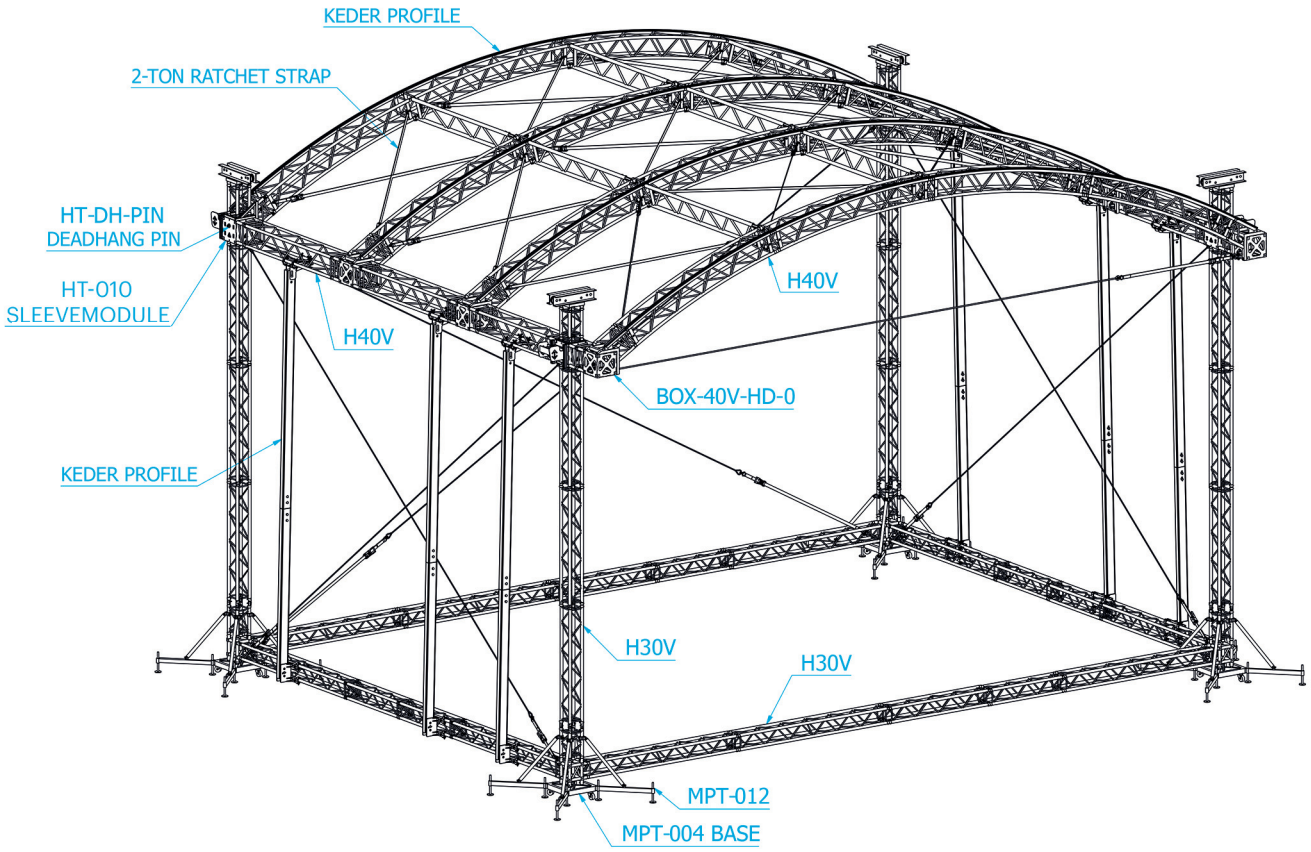
KEDER PROFILE
2-TON RATCHET STRAP
HT-DH-PIN
DEADHANG PIN
HT-010
SLEEVEMODULE
H40V
H40V
BOX-40V-HD-0
KEDER PROFILE
H30V
H30V
MPT-012
MPT-004 BASE

MINI-FLAT ROOF

SYSTEM DESCRIPTION

The three standard sizes: 8 x 6m (in the picture), 6x4m and 4 x 4m, are constructed of H30V multi-purpose truss elements. The structure stands on special designed steel base sections with integrated rigging points. Due to its size you can put the ballast immediatly on top of the base. It also has the possibility to use them in combination with ground anchors.

Different configurations can be achieved by just adding standard truss elements, which makes it easy to change the size.
All available standard structures are calculated according to the latest European regulation for temporary structures. Other sizes will be available on request.

ROOF STRUCTURE	
Towers	H30V truss
Main grid	H30V truss

TECHNICAL SPECIFICATIONS - ARC ROOF	
Dimensions	8 x 6 m (23'3" x 19'8") 6 x 4 m (19'8" x 13'1") 4 x 4 m (13'1" x 13'1")
Loading capacity	80 kg p/mtr 250 kg PA load
Total weight	500 kg
Transportation volume	16 m³
Max. wind speed	28,4 m/second, 63,3 mph

Consult Prolyte for up-to-date information on loading capacity, wind speed, total weight and transportation volume in line with the latest regulations.

Advantages:
- Easy to handle
- Standard components
- Ideal for smaller events

OPTIONS	
Back	Side and up
Canopy colour	Standard: outside grey, inside black (other colours possible)
Soundwings	N/A
Ballast	Several possibilities on request depending on construction. For example, water tanks concrete blocks
Staging	Prolyte stage elements Probeam combined with a scaffolding stage, or a Layher stage.
Groundring	N/A

Photo: DWR distribution, South Africa. Project: Proudly Bidvest Charity Walk

SYSTEM DESCRIPTION

A self climbing tower-based structure with a sloping roof toward the back of the stage, the Flat Roof is remarkably easy to build. Mainly based on standard trusse modules, the roof is available in two different sizes to provide a number of building options. The Flat roof can be considered as an entry-level system, which can easily be expanded to a MPT Roof system.

INCLUDING

- Tension gear and steel wires
- Structural report

ROOF STRUCTURE	
Towers	4 x MPT-tower, mast sections of H30V truss
Main grid	H40V and H40L truss

TECHNICAL SPECIFICATIONS - FLAT ROOF	
Dimension	10 x 8 m (32'9" x 26'3") 8 x 6 m (26'3" x 19'8")
Loading capacity	10 x 8 m approx. 4720 kg 8 x 6 m approx. 2940 kg
Total weight	10 x 8 m approx. 1600 kg 8 x 6 m approx. 1400 kg
Transportation volume	10 x 8 m approx. 16 m³ 8x 6 m approx. 16 m³
Max. wind speed	28,4 m/second, 63,3 mph

Advantages:

- Easy to handle, quick setup
- Ideal for smaller events
- Extra options available

OPTIONS	
Canopy colour	Standard: outside grey, inside black (other colours possible)
Soundwings	Optional (yes, 1000 kg)
Ballast	Several possibilities on request depending on construction. For example, water tanks concrete blocks
Staging	Prolyte stage elements Probeam combined with a scaffolding stage, or a Layher stage.

Photo: DWR distribution, South Africa. Project: Proudly Bidvest Charity Walk

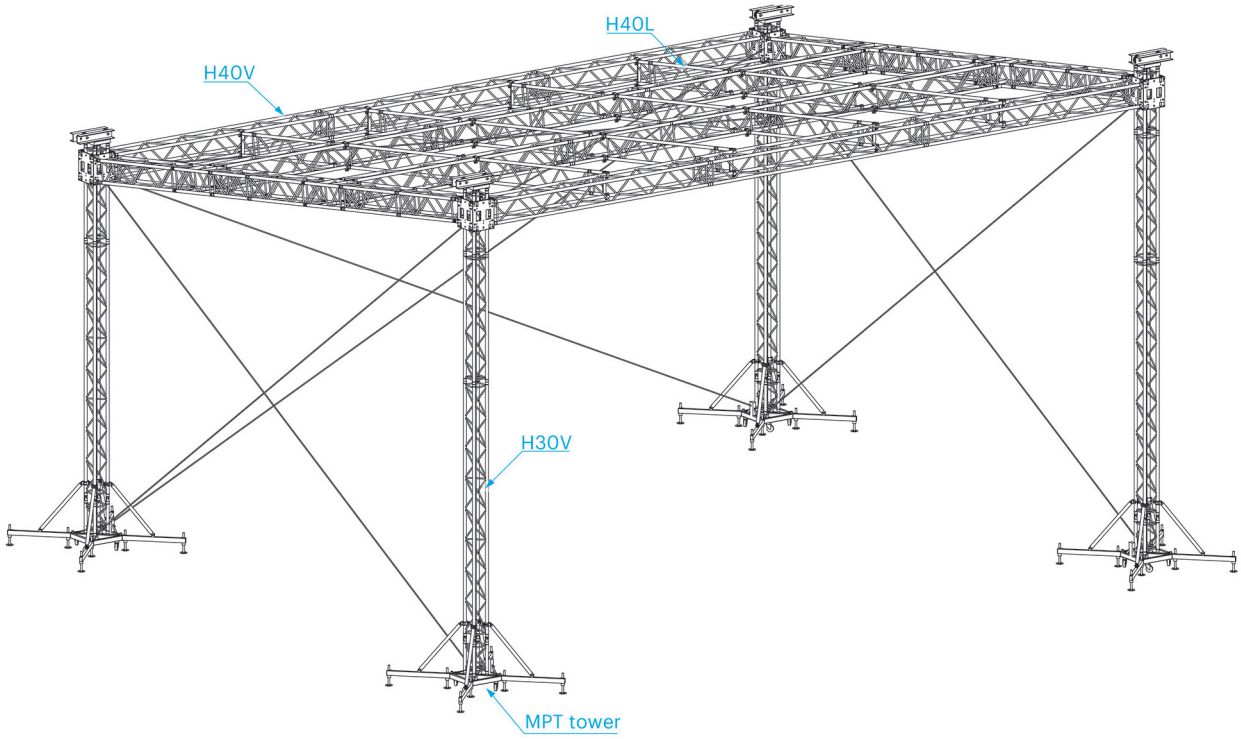

Front view

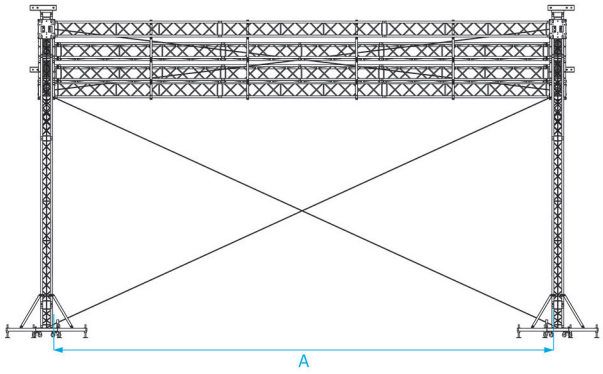

Side view

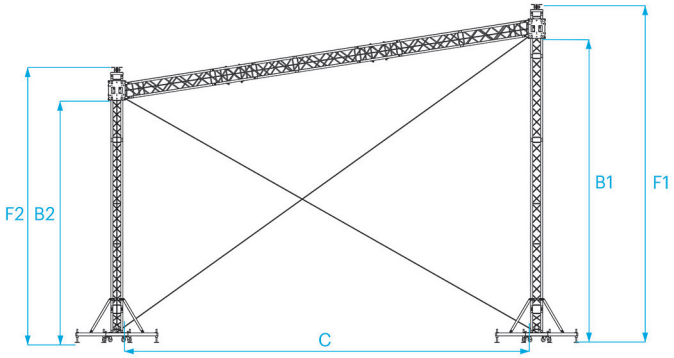

Top view

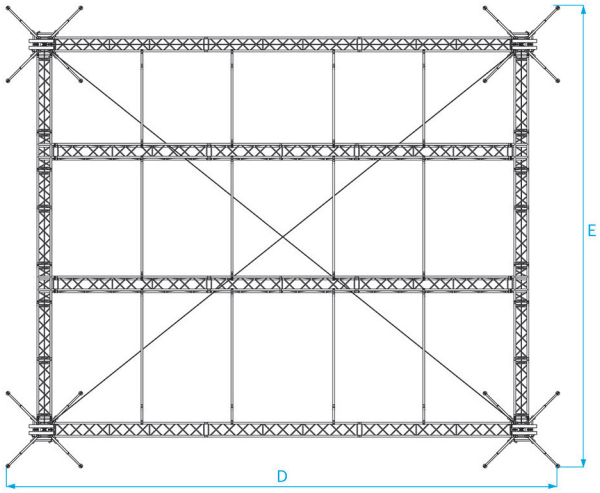

FLAT ROOF SYSTEM		Inside							
Stage measurements		A		B1		B2		C	
10 x 8 m	32'9" x 26'3"	10,15 m	33'3"	7,24 m	23'6"	6,08 m	19'11"	7,78 m	25'6"
8 x 6 m	26'3" x 19'8"	8,15 m	26'7"	6,02 m	19'9"	5,16 m	16'11"	5,80 m	19'0"

FLAT ROOF SYSTEM		Outside							
Stage measurements		D		E		F1		F2	
10 x 8 m	32'9" x 26'3"	12,44 m	40'9"	10,07 m	33'0"	8,06 m	26'5"	7,06 m	23'1"
8 x 6 m	26'3" x 19'8"	8,44 m	47'4"	8,09 m	26'6"	8,06 m	26'5"	7,06 m	23'1"

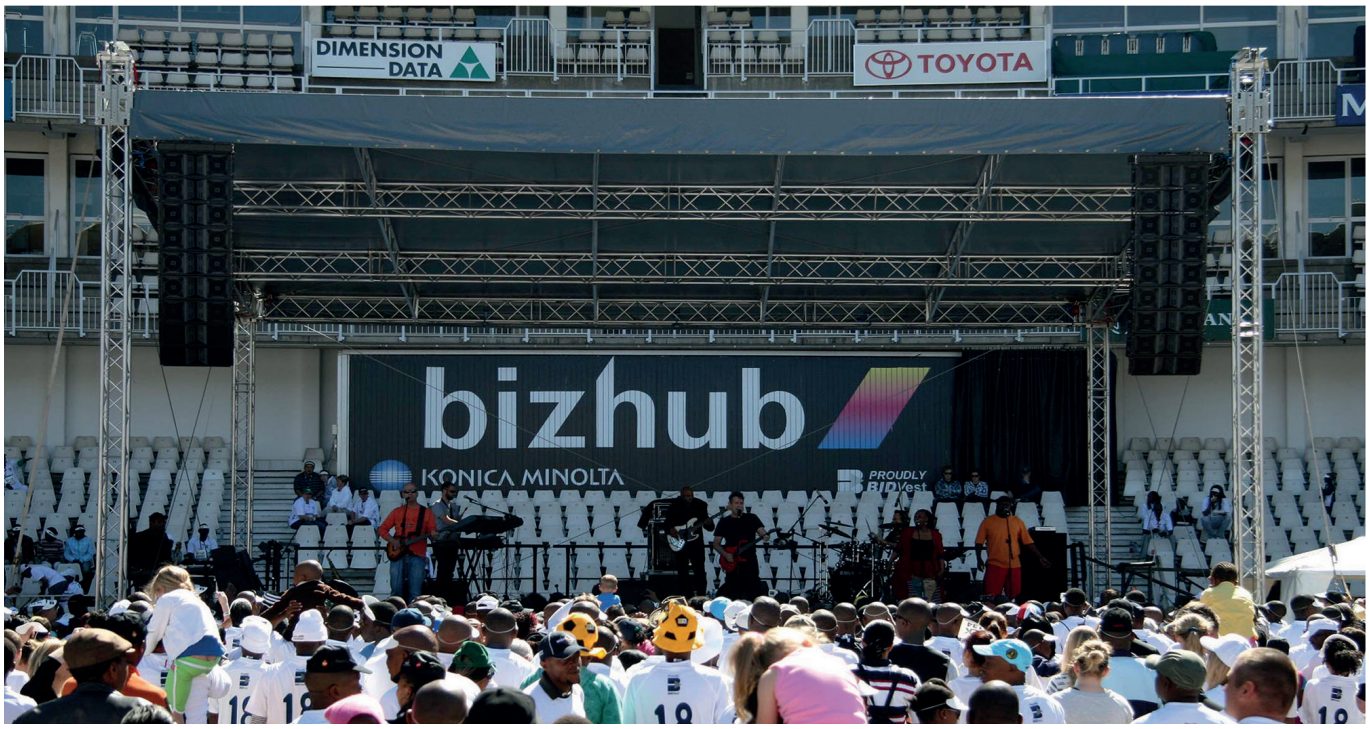

Photo: DWR distribution, South Africa. Project: Proudly Bidvest Charity Walk

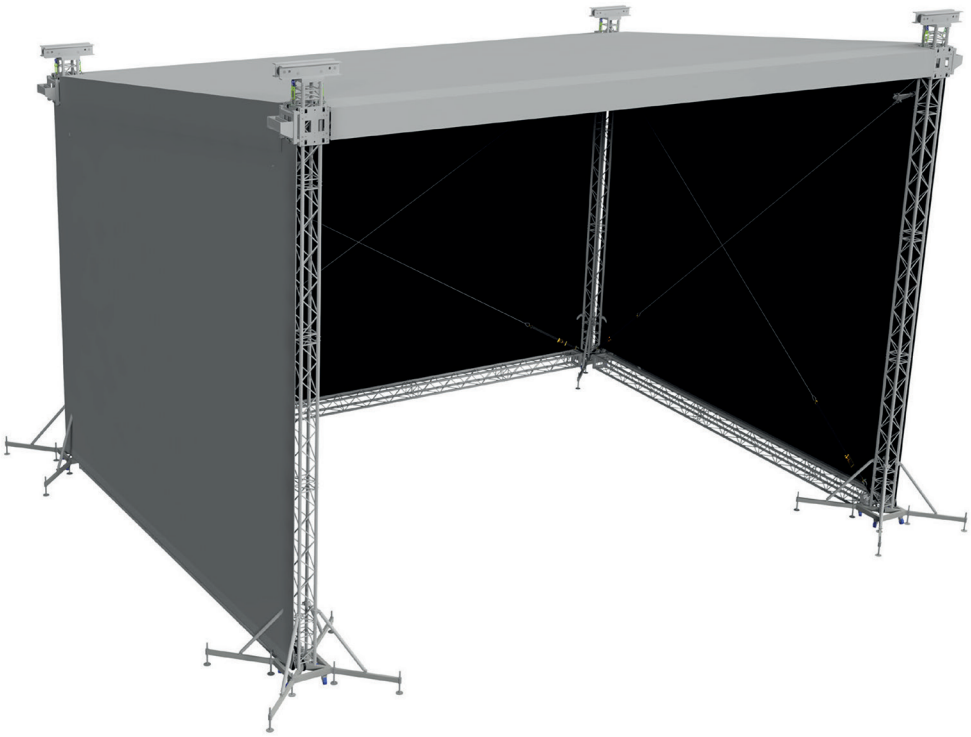

Photo: BVRent

SYSTEM DESCRIPTION

The CLT Roof is a tower-based structure with a curved roof. It is based on the standard MPT Roof, which can easily be transformed into a CLT Roof simply by adding a different set of top units.
The CLT roof top section is based on arched H30D truss with integrated keder profiles to mount the canopy. These arches are supported by special frames which are mounted on the basic grid trusses.

INCLUDING

- Tension gear and steel wires
- Structural report

ROOF STRUCTURE	
Towers	4 x MPT-tower
Main grid	H40V and H30D truss
TECHNICAL SPECIFICATIONS - CLT ROOF	
Dimensions	12 x 10 m, 12 x 8 m, (39'4" x 32'9"), (39'4" x 26'3")
Loading capacity	12 x 10 m approx. 2470kg 12 x 8 m approx. 2470kg
Total weight	approx. 1900 kg / 4188 lbs
Transportation volume	approx. 32 m^3 / 1130 cu. ft.
Max. wind speed	28,4 m/second, 63,3 mph

OPTIONS	
Canopy	Side, back and top
Canopy colour	Standard: outside grey, inside black (other colours possible)
Soundwings	Optional (yes, 1000 kg)
Ballast	Several possibilities on request from 1,5 - 3 ton per tower depending on construction
Staging	Prolyte stage elements, EasyFrame B or Probeam combined with a scaffolding stage
Cantilever	Yes (included)

Photo: Impact Production Services (IPS) at Glamis Castle

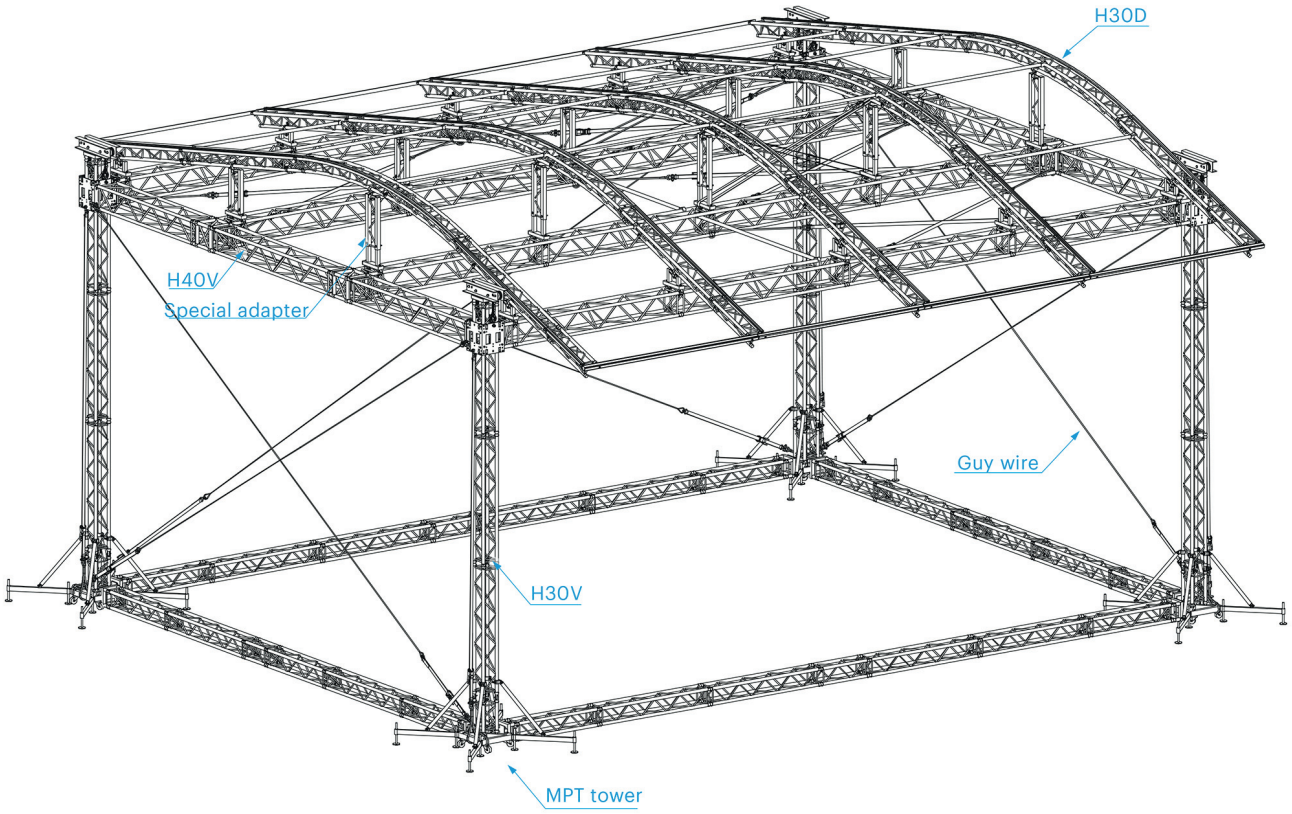

Front view

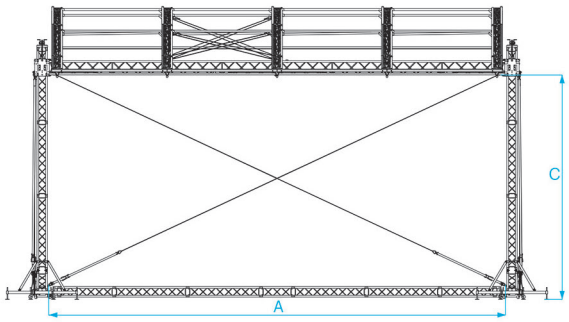

Side view

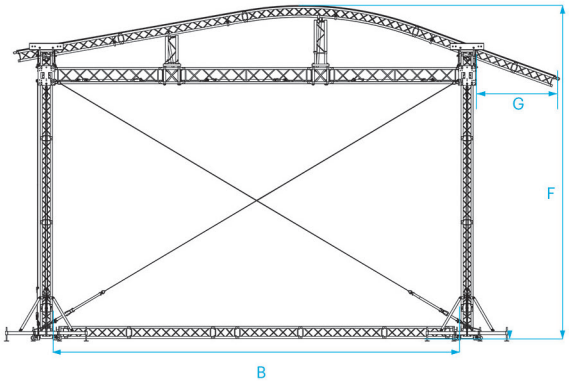

Top view

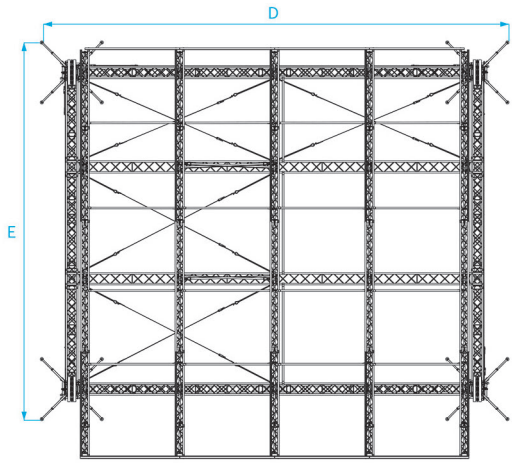

CLT ROOF SYSTEM	inside							
Stage measurements		A		B		C		
12 x 10 m	39'4" x 32'9"	12,53 m	41'11"	9,73 m	31'92"	6,13 m	20'11"	
12 x 8 m	39'4" x 26'3"	12,53 m	41'11"	7,69 m	25'23"	6,13 m	20'11"	

CLT ROOF SYSTEM	overall								
Stage measurements		D		E		F		G	
12 x 10m	39'4" x 32'9"	13,11 m	43'01"	10,30 m	33'79"	8,00 m	26'25"	2,19 m	7'19"
12 x 8 m	39'4" x 26'3"	13,11 m	43'01"	8,30 m	27'23"	8,00 m	26'25"	1,45 m	4'76"

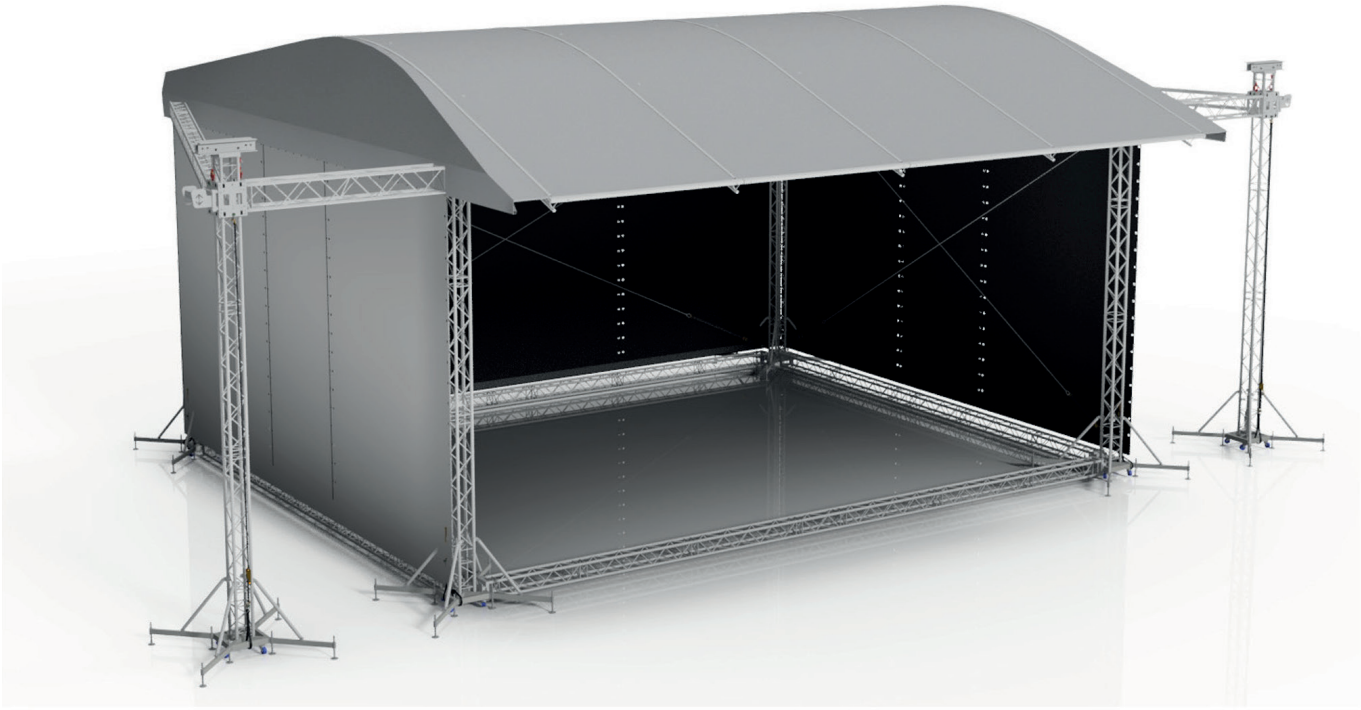

CLT ROOF 12 x 8 m

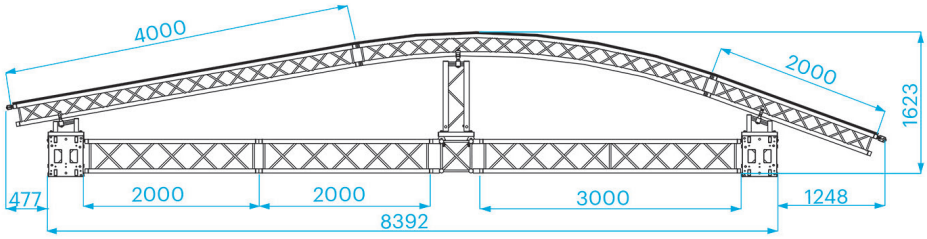

CLT ROOF 12 x 10 m

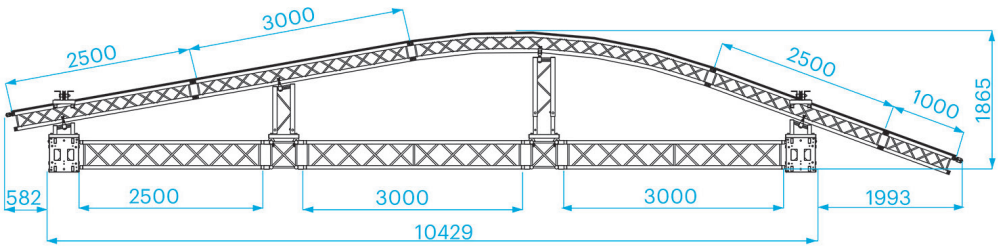

all measurements in mm

Photo: Install Profi, Russia

SYSTEM DESCRIPTION

The MPT Roof is a self climbing tower-based structure with a pitched roof, a design which guarantees optimum strength. Primarily configured from standard truss modules, the MPT Roof is available in two different sizes. However, the unrivalled flexibility of the system affords nearly 40 calculated building varieties or setup possibilities for your MPT Roof.

At Prolyte, we are aware that every season and every event brings different demands, and accordingly we have designed the MPT Roof to accommodate an extraordinary range of applications.

INCLUDING

- Tension gear and steel wires
- Structural report

ROOF STRUCTURE	
Towers	4 x MPT-tower, mast sections of H30V truss
Main grid	H30D and H40V truss

TECHNICAL SPECIFICATIONS - MPT ROOF	
Dimensions	12 x 10 m (39'4" x 32'9") 10 x 8 m (32'9" x 26'3")
Loading capacity	12 x 10 m approx. 3950 kg 10 x 8 m approx. 4500 kg
Total weight	12 x 10 m approx. 2400 kg 10 x 8 m approx. 2100 kg
Transportation volume	12 x 10 m approx. 40 m³ 10 x 8 m approx. 32 m³
Max. wind speed	28,4 m/s, 63,3 mph

Advantages:

- Designed to offer optimum strength
- Versatile applications
- Extra options available

OPTIONS	
Canopy colour	Standard: outside grey, inside black (Different colours available on request)
Soundwings	Optional (yes / loading 1000 kg each)
Ballast	Several possibilities on request depending on construction and wind speed
Staging	Prolyte stage elements, EasyFrame B or Probeam combined with a scaffolding stage
Cantilever	Yes

Photo: Metro Productions; Project: Homegrown festival in New Zealand

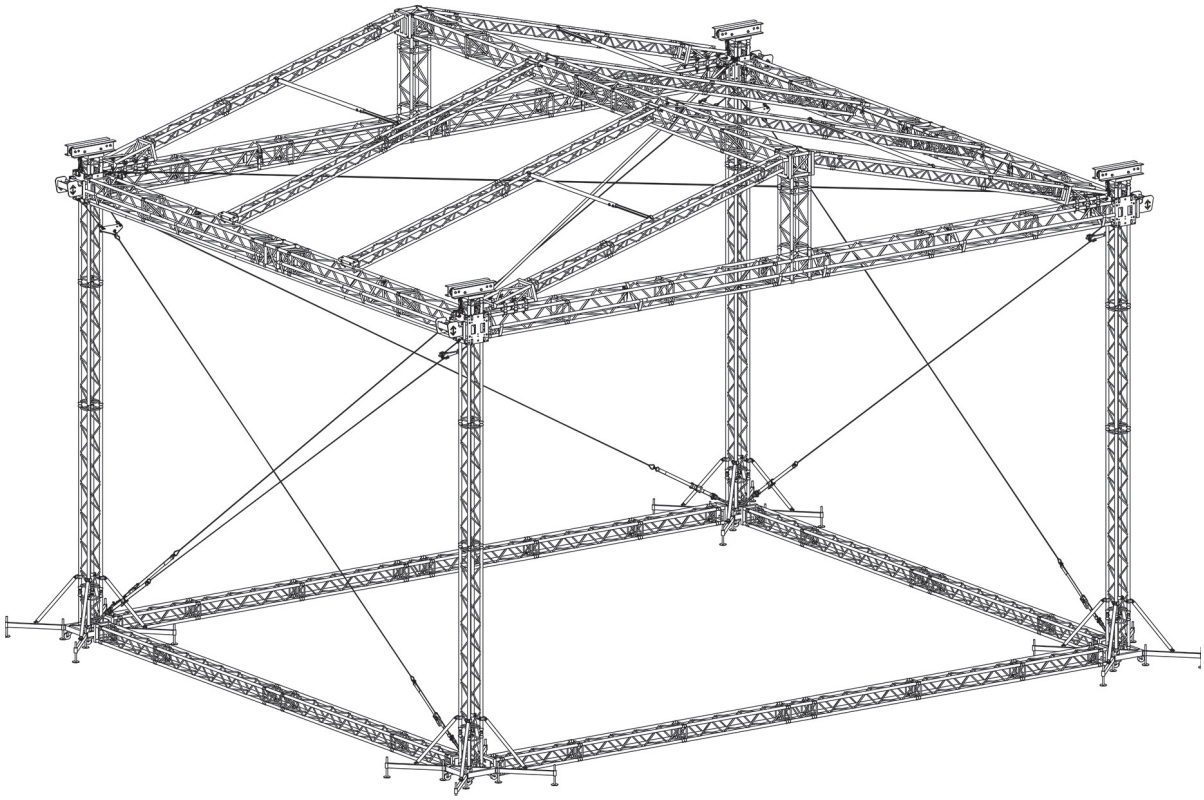

Front view

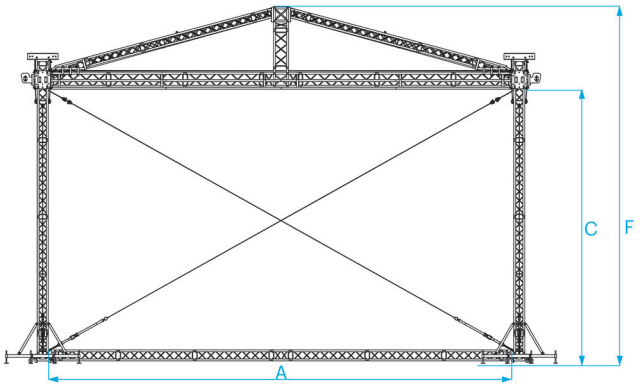

Side view

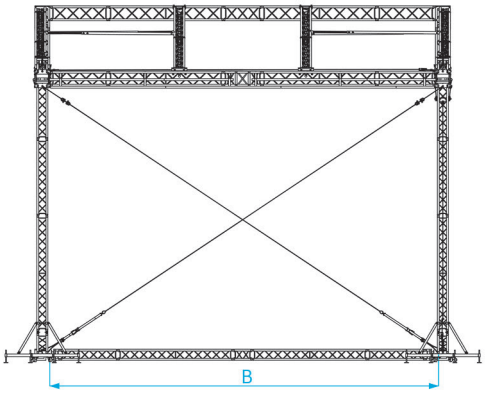

Top view

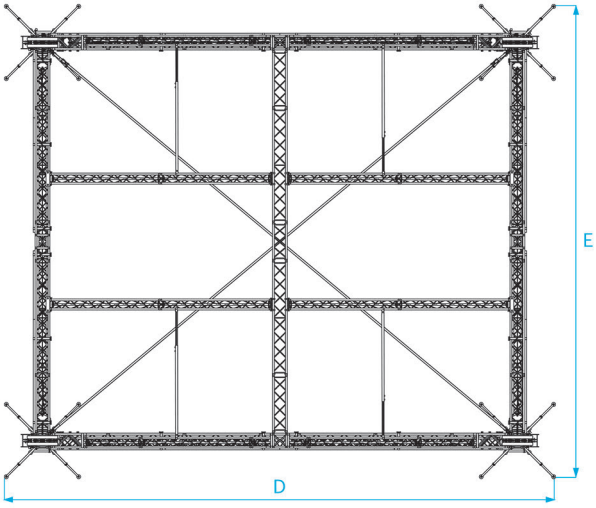

MPT ROOF SYSTEM		Inside						Overall					
Stage measurements		A		B		C		D		E		F	
12 x 10 m	39'4" x 32'9"	12,15 m	39'86"	10,15 m	33'30"	7,21 m	23'65"	12,72 m	41'73"	10,72 m	35'17"	9,35 m	30'67"
10 x 8 m	32'9" x 26'3"	10,15 m	33'30"	8,15 m	26'73"	7,21 m	23'65"	10,72 m	35'17"	8,72 m	28'60"	9,10 m	29'85"

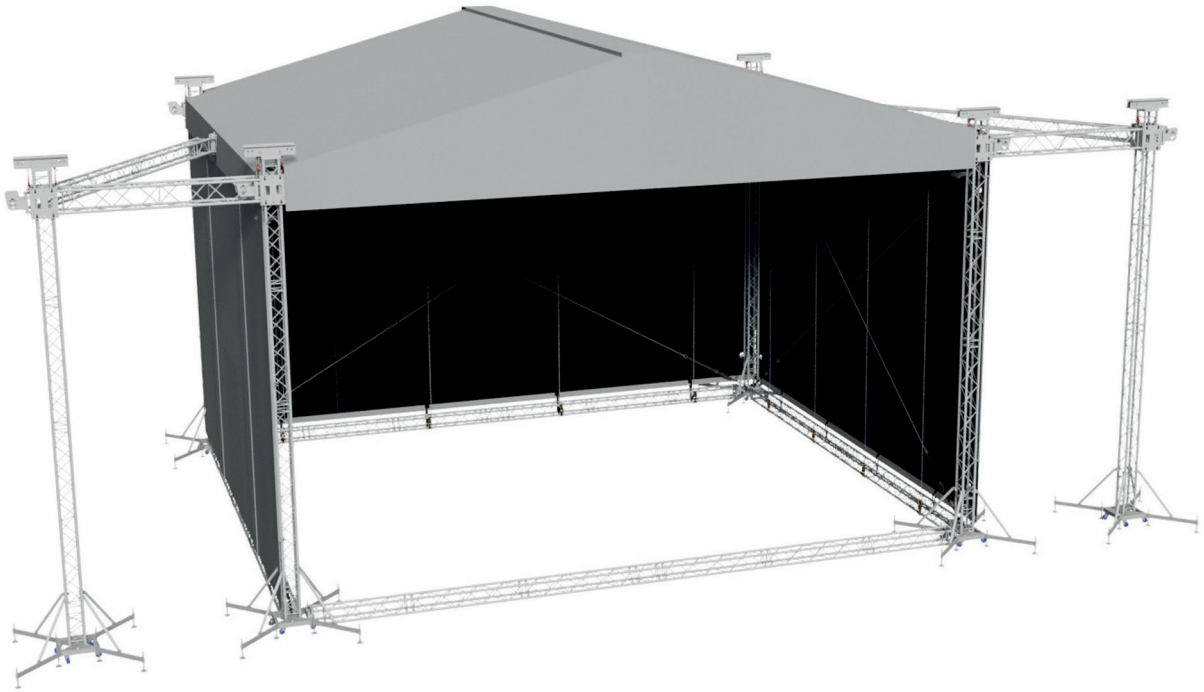

MPT ROOF 10 x 8 m

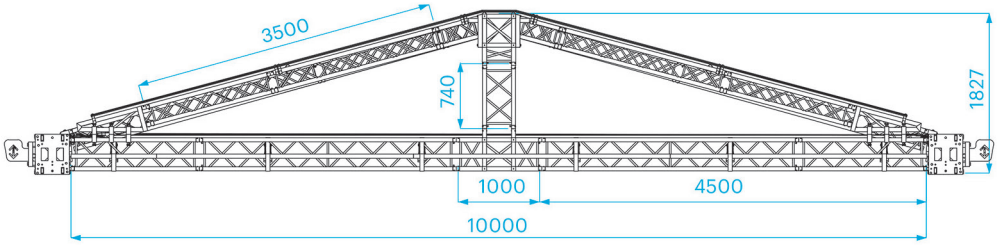

MPT ROOF 12 x 10 m

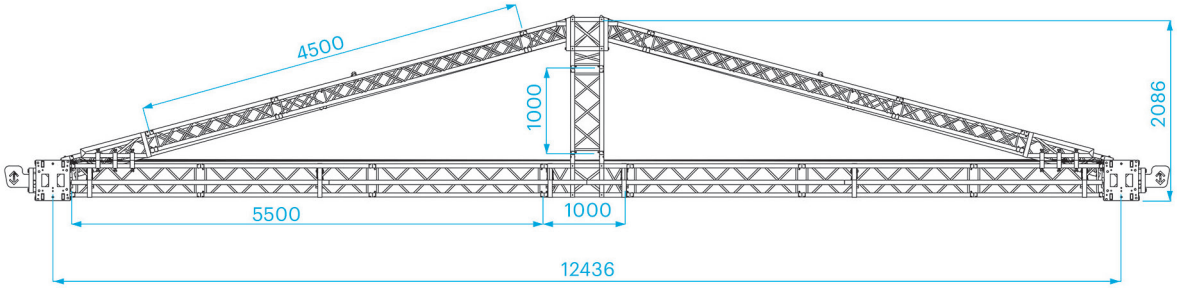

all measurements in mm

Photo: Profi, Ukraina

SYSTEM DESCRIPTION

The ST Roof is a self climbing tower-based structure with a pitched roof, a design that inherently offers optimum strength. The larger ST Series offers flexible possibilities for creating stage dimensions up to 20 × 14 m.

INCLUDING

- Tension gear and steel wires
- Structural report

ROOF STRUCTURE	
Towers	6 x ST-tower, mast sections of S40T truss
Main grid	S52SV truss and H40V truss

TECHNICAL SPECIFICATIONS - ST ROOF	
Dimension	20 x 14 m (65'7" x 45'11") 18 x 14 m (59'0" x 45'11") 16 x 14 m (52'5" x 45'11") 12 x 10 m (39'4" x 32'9")
Loading capacity	20 x 14 m approx. 4700 kg 18 x 14 m approx. 8000 kg 16 x 14 m approx. 9800 kg 12 x 10 m approx. 11000 kg
Total weight	20 x 14 m approx. 5400 kg 18 x 14 m approx. 5200 kg 16 x 14 m approx. 5000 kg 12 x 10 m approx. 3600 kg
Transportation volume	20 x 14 m approx. 110 m³ 18 x 14 m approx. 110 m³ 16 x 14 m approx. 110 m³ 12 x 10 m approx. 70 m³
Max. wind speed	28,4 m/second, 63,3 mph

Consult Prolyte for up-to-date information on loading capacity, wind speed, total weight and transportation volume in line with the latest regulations.

Advantages:

- Flexible possibilities for stage dimensions
- Designed to offer optimum strength
- Extra options available

OPTIONS	
Canopy	Side, back and top
Canopy colour	Standard: outside grey, inside black (other colours possible)
Soundwings	Optional (yes, loading 2000 kg each)
Ballast	Several possibilities on request from 1 - 7 ton per tower depending on construction
Staging	Prolyte stage elements, EasyFrame B or Probeam combined with a scaffolding stage

Photo: Showtech, Dubai

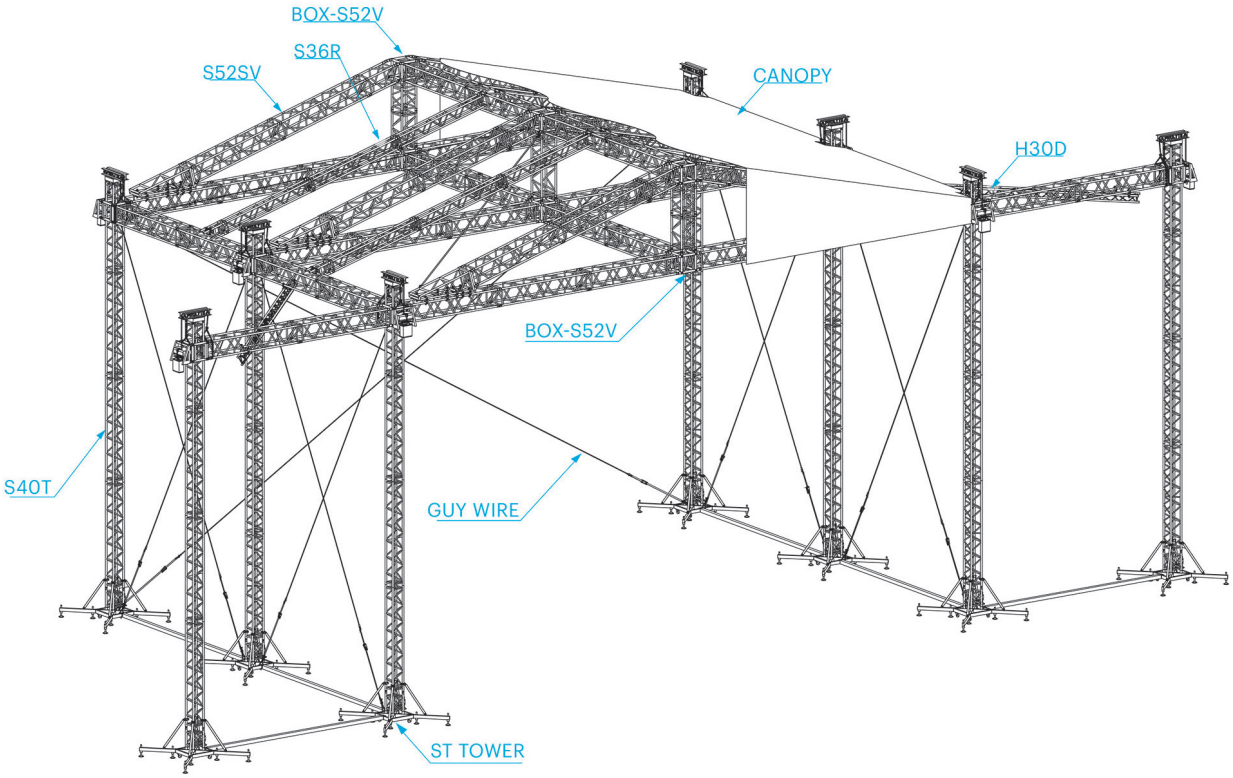

Front view

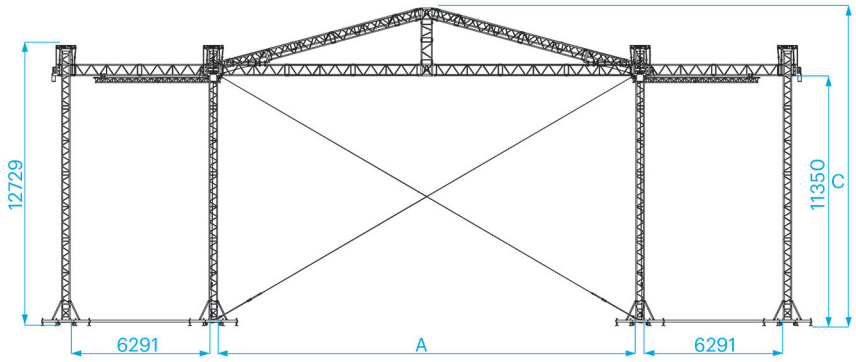

Side view

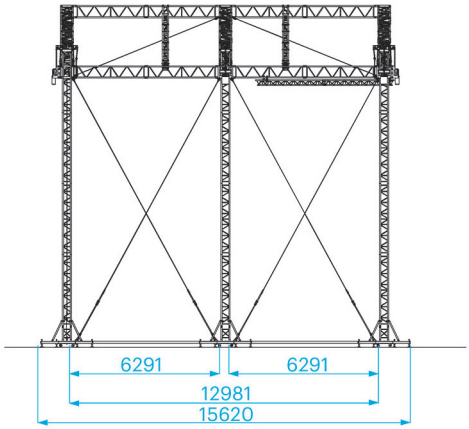

Top view

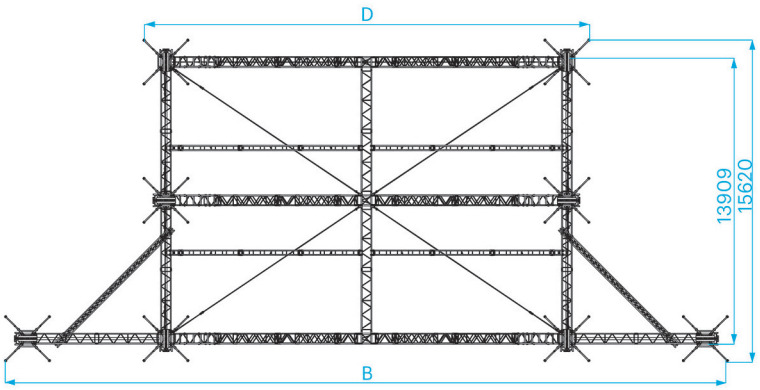

ST-ROOF SYSTEM

Stage measurements		A		B		C		D	
20 x 14 m	65'6" x 45'9"	20,99 m	68'8"	37,0 m	108'2"	14,70 m	48'2"	23,62 m	77'4"
18 x 14 m	59'0" x 45'9"	18,99 m	62'3"	35,0 m	114'8"	14,70 m	48'2"	21,62 m	70'9"
16 x 14 m	52'5" x 4 5'9"	16,99 m	55'7"	33,0 m	121'3"	14,70 m	48'2"	19,62 m	64'3"

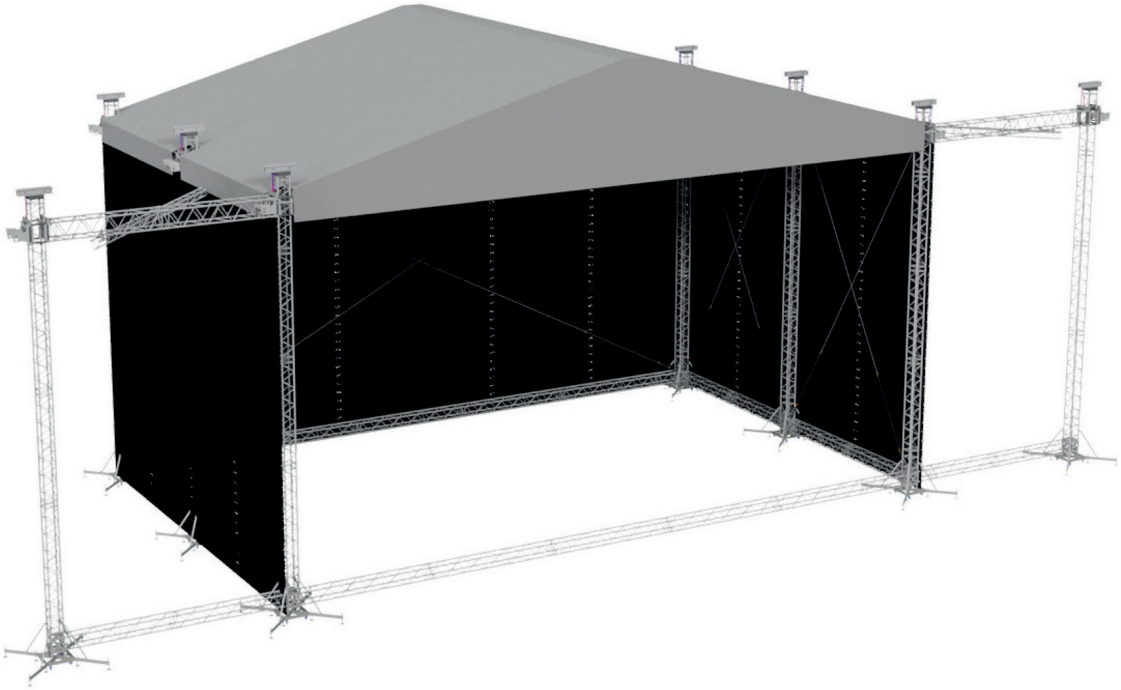

ST ROOF 16 x 14 m

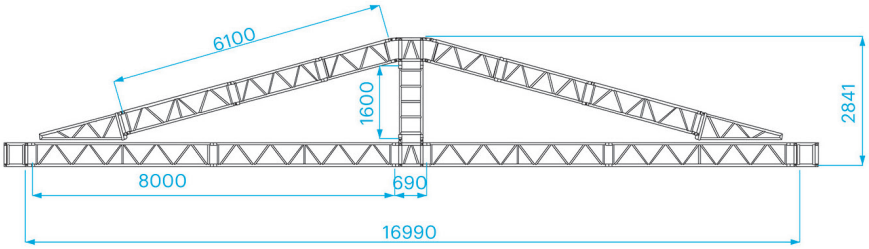

ST ROOF 18 x 14 m

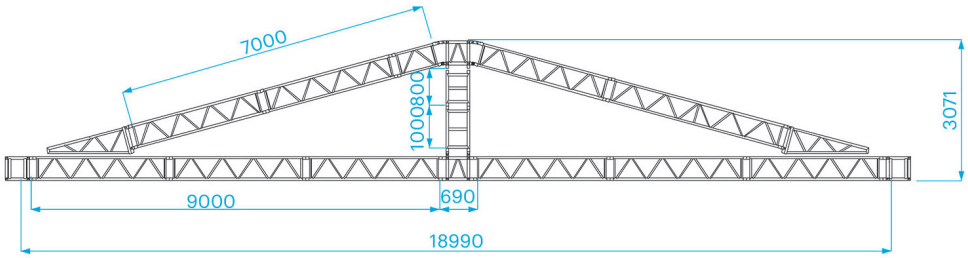

ST ROOF 20 x 14 m

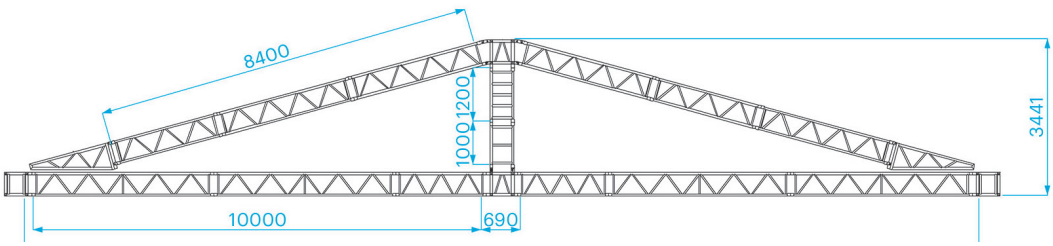

all measurements in mm

Photo: Photo: Tom Jones, Holkham Hall, the UK

SYSTEM DESCRIPTION

Based on H40V truss, the Polygon XII roof system offers a multi-functional and cost-effective solution. The straight truss lengths convert into a curved "tunnel" type roof with the addition of special corner sections. Side stage areas and the cantilever construction are integrated in the design. The back wall is based on standard kedar profile and can be easily removed in case of bad weather conditions.
The complete roof structure is based on a metric system and fully compatible with a Layher sub-structure and integrated Layher adapters. The Polygon roof system comes in four different sizes apart from the width of the stage, also the depth can be varied. This makes the roof system adaptable to any type of event.
To convert from one size to the other, only some straight length parts need to be added, all corner parts remain the same. This solution minimizes the amount of parts needed and offers maximum flexibility. E.g. for a 12x14 roof size you start with 1,5 m truss lengths. By adding additional 0,25 or 0,50 m length, you can convert your roof into the 14 x 14 m or 16 x 14 m size respectively. By adding the 0,25 m. length to the 16x14 m size, you can have the 18 x 14 m roof size.

INCLUDING

- Tension gear and steel wires
- Structural report

ROOF STRUCTURE	
Towers	N/A
Main grid	H40V truss

TECHNICAL SPECIFICATIONS - POLYGON XII ROOF	
Dimension	18 x 14 m (59'0" x 45'11") 16 x 14 m (52'5" x 45'11") 14 x 14 m (45'11" x 45'11") 12 x 14 m (39'5'' x 45'11")
Loading capacity	18 x 14 m approx. 7530 kg 16 x 14 m approx. 6920 kg 14 x 14 m approx. 6990 kg 12 x 14 m approx. 8420 kg
Total weight (Layher stage included)	18 x 14 m approx. 17000 kg 16 x 14 m approx. 16500 kg 14 x 14 m approx. 15500 kg 12 x 14 m approx. 15000 kg
Transportation volume	18 x 14 m approx. 120 m³ 16 x 14 m approx. 110 m³ 14 x 14 m approx. 100 m³ 12 x 14 m approx. 100 m³
Max. wind speed	28,4 m/second, 63,3 mph

Consult Prolyte for up-to-date information on loading capacity, wind speed, total weight and transportation volume in line with the latest regulations.

Advantages
- Easy to convert in four sizes
- Minimum amount of parts needed
- Width and depth can be varied
- Fully compatible with a Layher sub-structure

OPTIONS	
Canopy	Side, back and top
Canopy colour	Standard: outside grey, inside black (other colours possible)
Soundwings	Yes / loading 2000 kg each
Ballast	Several possibilities details on request. For example, water tanks, concrete blocks
Staging	Prolyte stage elements, Probeam combined with a scaffolding stage, or a layher stage

Photo: Tom Jones, Holkham Hall, the UK

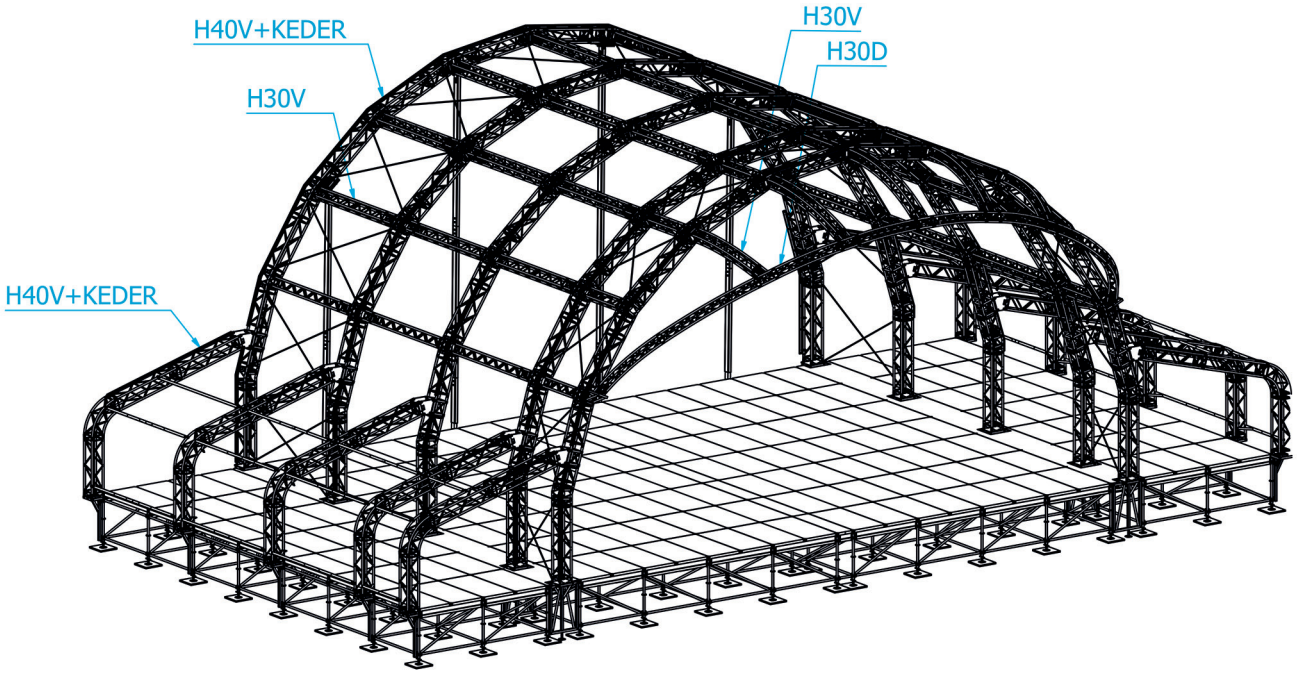

Front view

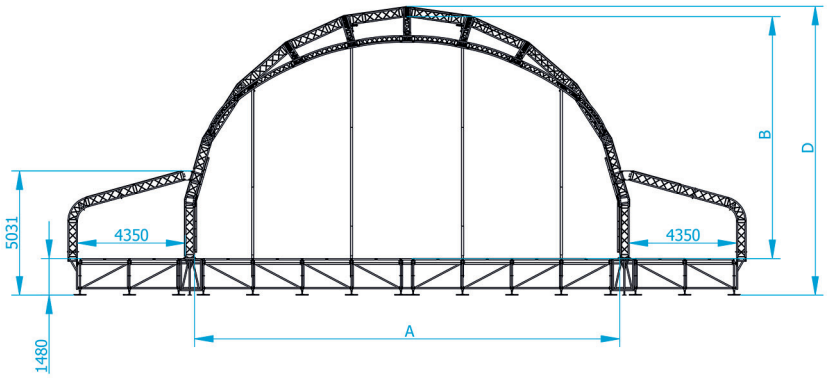

Side view

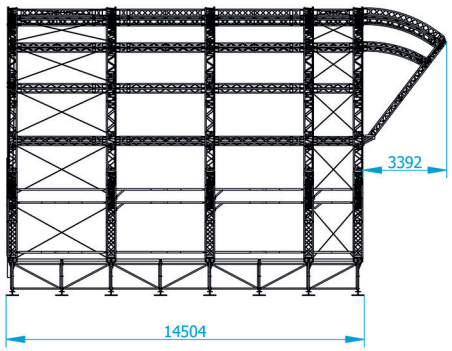

Top view

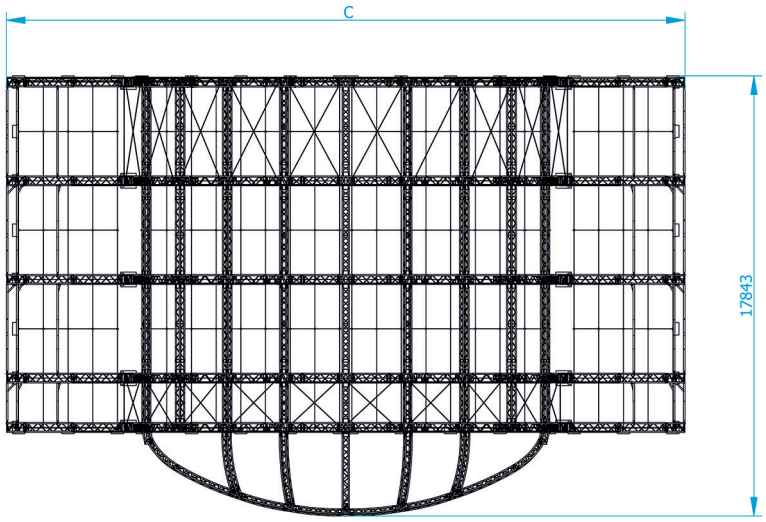

POLYGON XII ROOF SYSTEM

Stage measurements		A		B		C		D	
12 x 14 m	39’37’’ x 45’93’’	13,22 m	43’37’’	8,26 m	27’10’’	23,49 m	77’’07’’	10,13 m	33’23’’
14 x 14 m	45’93’’ x 45’93’’	15,72 m	51’57’’	9,08 m	29’79’’	25,99 m	85’27’’	10,97 m	35’99’’
16 x 14 m	52’49’’ x 45’93’’	17,22 m	56’50’’	9,81 m	32’19’’	27,49 m	88’58’’	11,70 m	38’39’’
18 x 14 m	59’06’ x 45’93’’	18,22 m	59’78’’	10,58 m	34’71’’	29,49 m	96’75	12,48 m	40’94’’

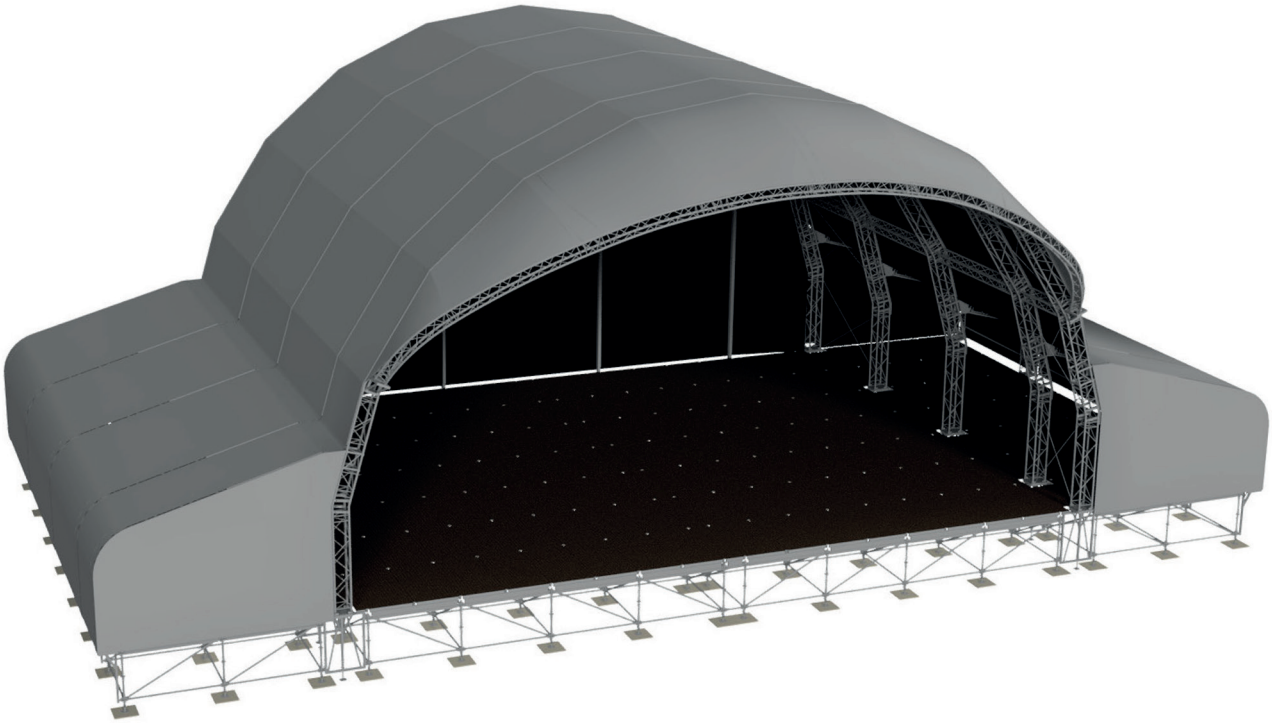

GIANT ARC ROOF

Photo: Interstage, The Netherlands Project: MBM MartyBrugmansMusic, Concert At Sea, Renesse, The Netherlands

SYSTEM DESCRIPTION

The Giant ARC Roof is a tower-based structure that is constructed using 3-to-5 arches. Straight truss sections, interconnected with bottom hinges and topside spreader plates, create the arch needed over the complete span. Two steel wires per span absorb horizontal forces caused by the loading. The arches are connected to standard ST towers.

- Structural report

INCLUDING

- Tension gear and steel wires

ROOF STRUCTURE	
Towers	ST tower (16 x 12 m) or CT tower (20 x 16 m)
Main grid	S52SV truss (16 x 12 m) or B100RV truss (20 x 16 m)

TECHNICAL SPECIFICATIONS - GIANT ARC ROOF	
Dimension	16 x 12 m (52'5" x 39'5")
Loading capacity (UDL)	16 x 12 m approx. 5500 kg
Total weight	16 x 12 m approx. 5000 kg
Transportation volume	16 x 12 m approx. 110 m³
Max. wind speed	28,4 m/second, 63,3 mph

Consult Prolyte for up-to-date information on loading capacity, wind speed, total weight and transportation volume in line with the Eurocode regulations.

Advantages:

- Extra options available
- Curved design

OPTIONS		
Canopy	Side, back and top	
Canopy colour	Standard: outside grey, inside black (other colours possible)	
Soundwings	Yes / loading 2000 kg each	
Ballast	Several possibilities details on request. For example, water tanks, concrete blocks	
Staging	Prolyte stage elements, Probeam combined with a scaffolding stage, or a layher stage	
Prolyft hoist (16x14 Giant Arc Roof) and accessories	4x PAE-1000DC-0030 4x PAE-A-FC1000 2x PLA-33-20 4x PLA-30-10 1x PAE-C8DC-10	1x PLA-41-001 4x PAE-A-50-010 2x PLA-30-20 1x PLA-34-02

Photo: Interstage; Project: Olympische Huldiging Assen

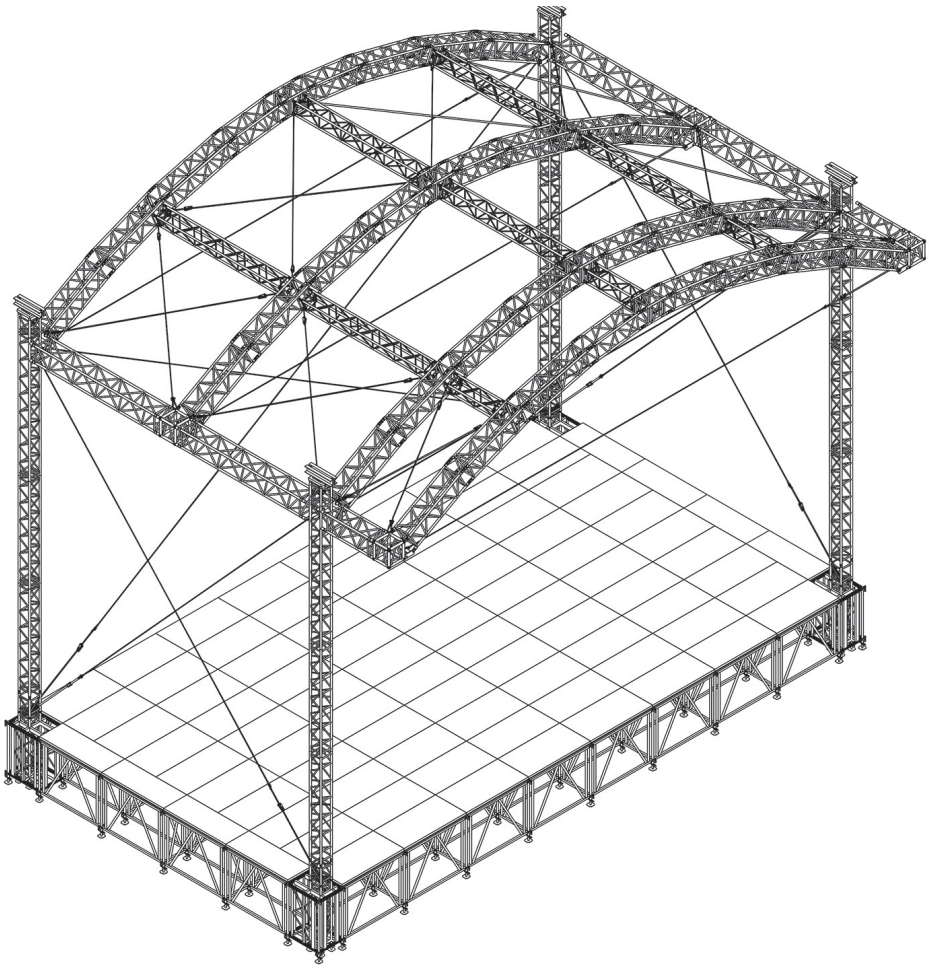

Front view

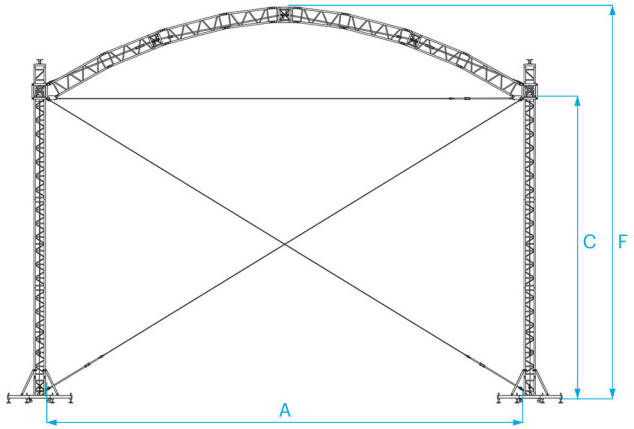

Side view

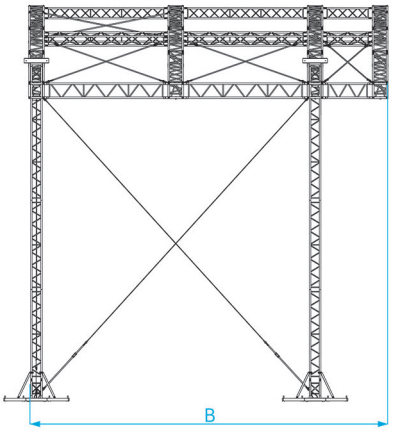

Top view

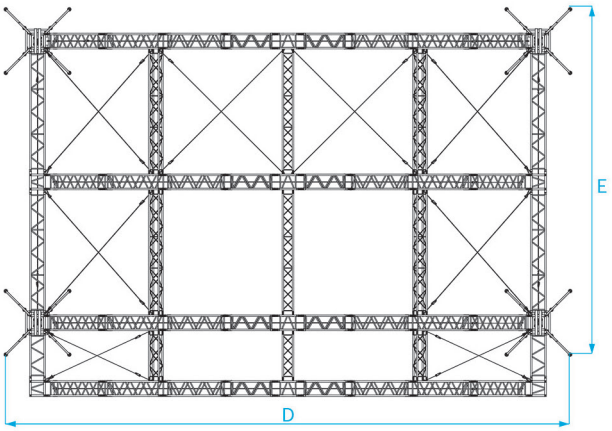

GIANT ARC ROOF SYSTEM		Inside					
Stage measurements		A		B		C	
16 x 12 m	52'5" x 39'4"	16,30 m	53'5"	12,09 m	39'7"	11,34 m	37'2"

GIANT ARC ROOF SYSTEM		Overall					
Stage measurements		D		E		F	
16 x 12 m	52'5" x 39'4"	18,93 m	62'1"	11,62 m	38'1"	13,47 m	44'2"

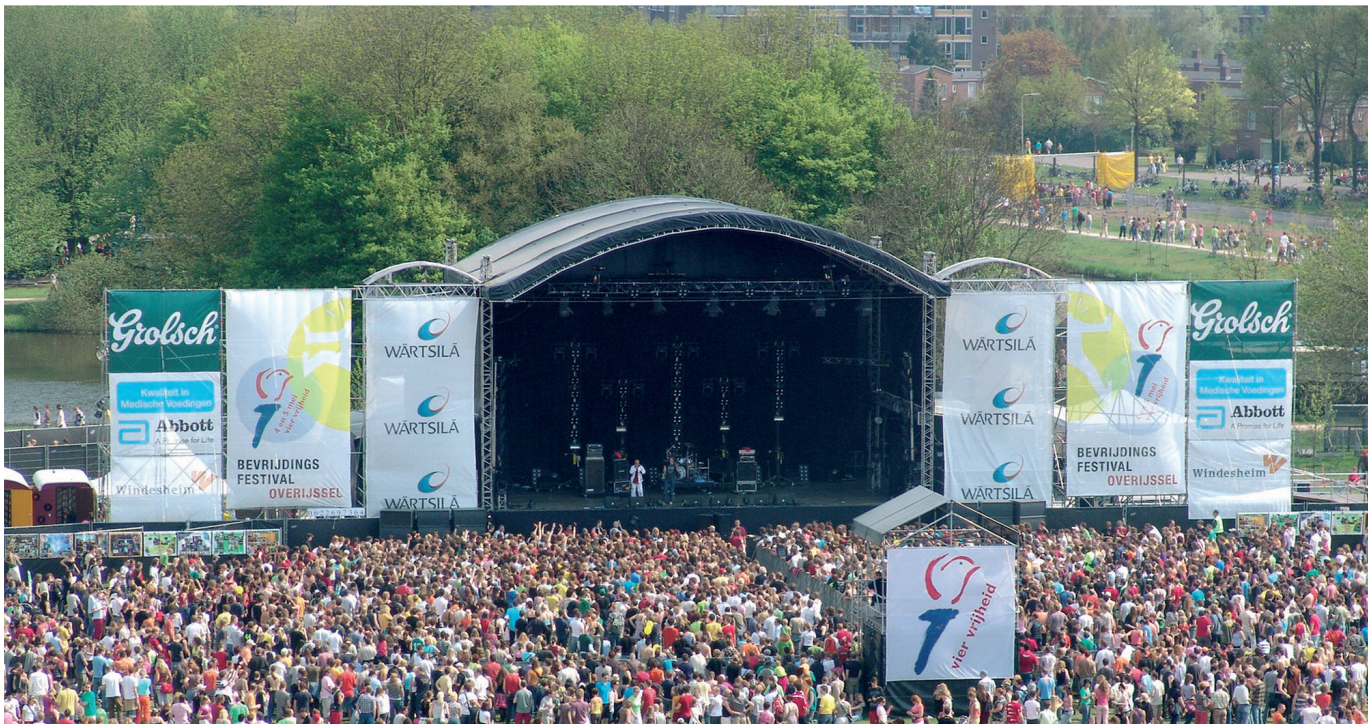

Photo: Interstage, The Netherlands, Project: Bevrijdingsfestival Overijssel, Zwolle, The Netherlands

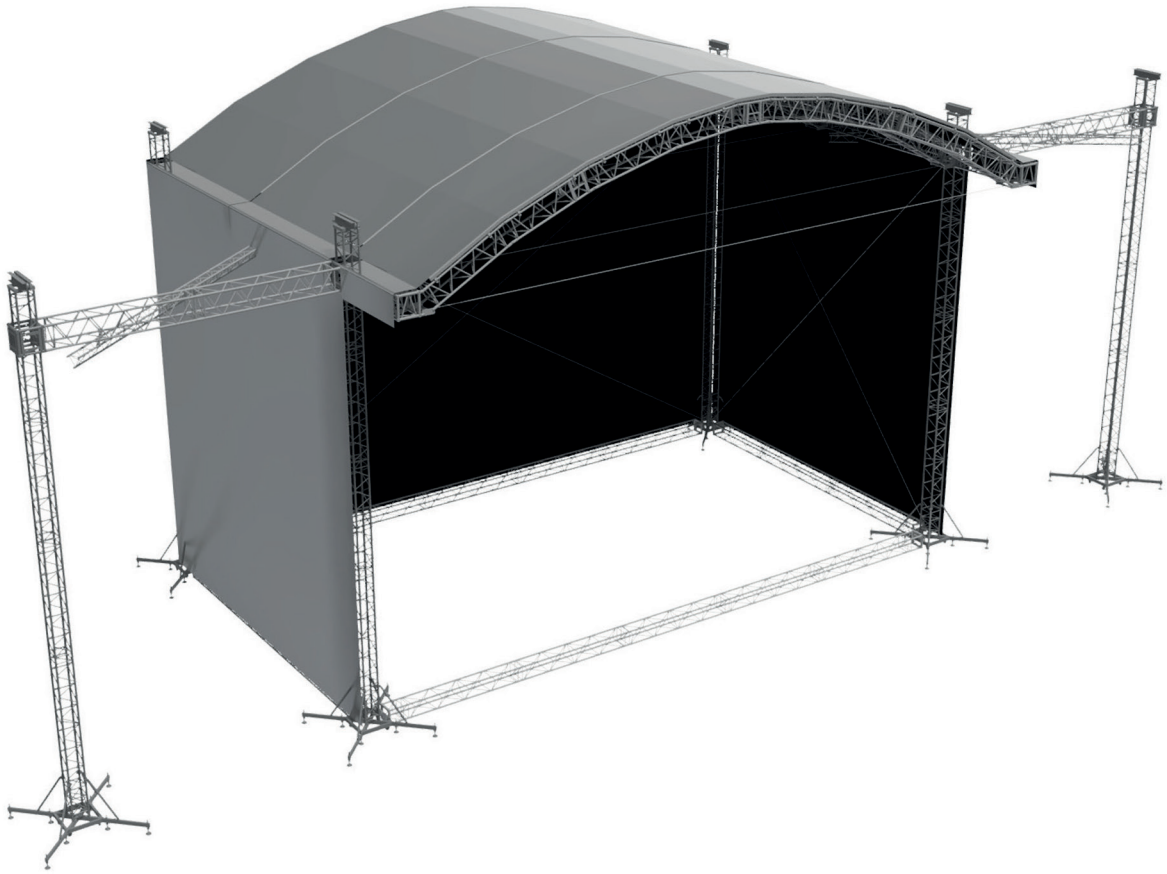

Photo: PROmontaje, Caracas, Venezuela

SYSTEM DESCRIPTION

The XXL roof system is based on 9 CT towers, of which one is a stack tower underneath the back span. The roof has main grid based on B100RV truss and a pitched roof structure based on B52SV truss, which is the standard S52SV truss adapted with a main chord of 60 x 6 mm. Layher adapters guarantee a flawless integration of the towers and the stage.

The main roof comes in 3 basic measurements 30 m x 20 m, 25 m x 20 m, 20 m x 20 m,(different measurements on request) realising a clearance of 14m between the stage and the main grid. The loading capacity of the roof is approx. 30 ton, uniformly distributed along the roof.

INCLUDING

- Tension gear and steel wires
- Structural report

ROOF STRUCTURE	
Towers	CT towers
Main grid	B100RV main grid, B52SV as raster

TECHNICAL SPECIFICATIONS - XXL Roof	
Dimensions	30 x 20 m (98'43'' x 65'62'') 25 x 20 m (82'02'' x 65'62'') 20 x 20 m (65'62'' x 65'62'')
Loading capacity	30 x 20 m, approx. 28,3T 25 x 20 m, approx. 24,3T 20 x 20 m, approx. 20,2T
Total weight	30 x 20 m, approx. 17000kg 25 x 20 m, approx. 16000kg 20 x 20 m, approx. 15000kg
Transportation volume	30 x 20 m, approx. 300m³ 25 x 20 m, approx. 280m³ 20 x 20 m, approx. 260m³
Max. wind speed	28,4 m/s, 63,3 mph

Consult Prolyte for up-to-date information on loading capacity, wind speed, total weight and transportation volume in line with the Eurocode regulations.

OPTIONS	
Canopy	Top, side and back
Canopy colour	Standard: outside grey, inside black (other colours possible)
Soundwings	Optional (yes 4800 kg each)
Ballast	Several possibilities on request. For example, concrete blocks
Cantilever	Yes
Staging	Prolyte stage elements Probeam combined with a scaffolding stage. or a Layher stage.

Photo: PROmontaje, Caracas, Venezuela

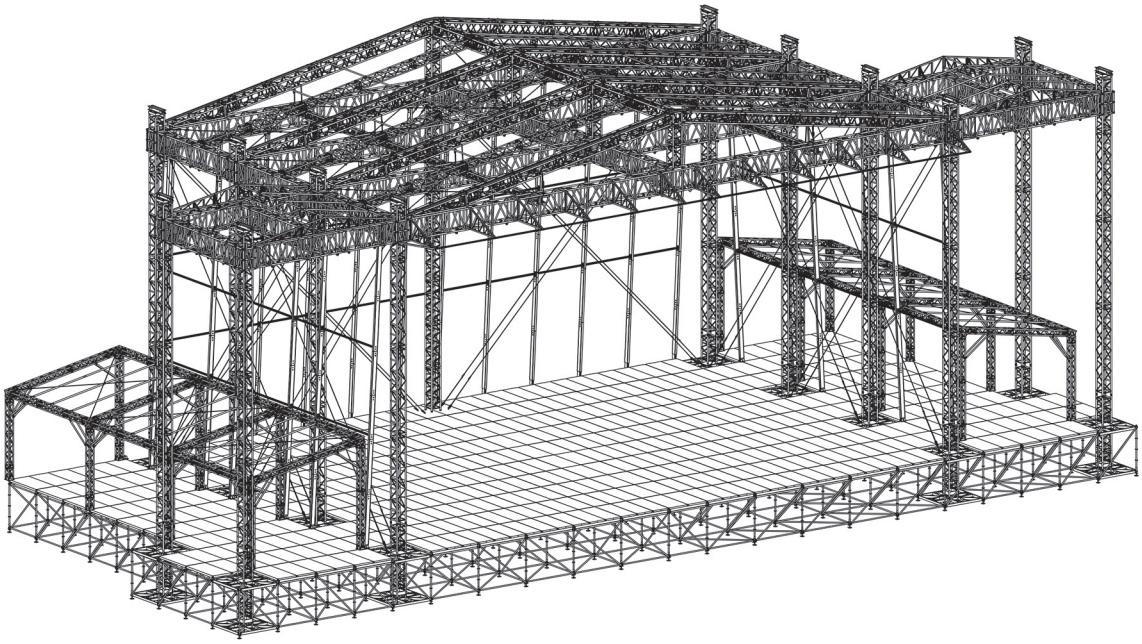

Front view

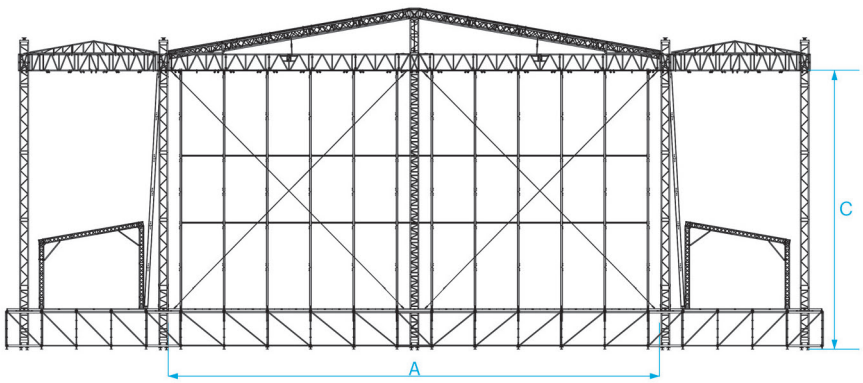

Side view

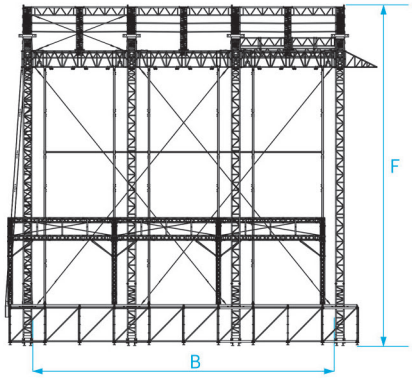

Top view

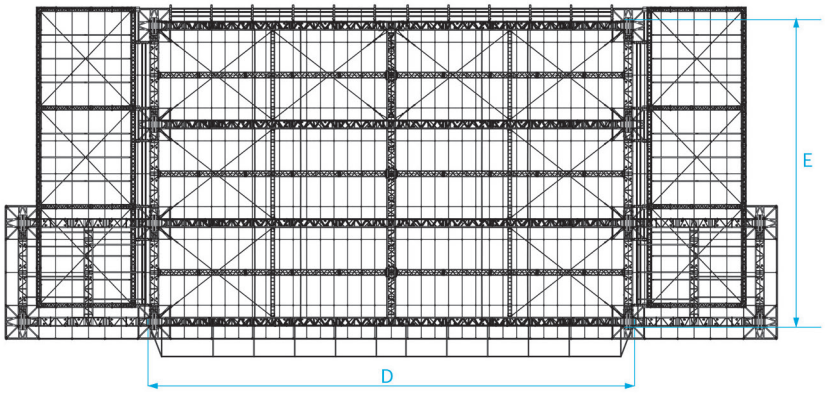

XXL Roof		Inside						Overall					
Stage measurements		A		B		C		D		E		F	
30X20	98'0"x65'6"	29,33 m	96'12"	18,12 m	59'45"	16,56 m	54'33"	30,40 m	99'73"	19,12 m	62'72"	20,19 m	66'24"
25X20	82'0"x65'6"	24,18 m	79'33"	18,12 m	59'45"	16,56 m	54'33"	25,25 m	82'84"	19,12 m	62'72"	20,19 m	66'24"
20x20	65'6"x65'6"	19,03 m	62'43"	18,12 m	59'45"	16,56 m	54'33"	20,11 m	65'97"	19,12 m	62'72"	20,19 m	66'24"

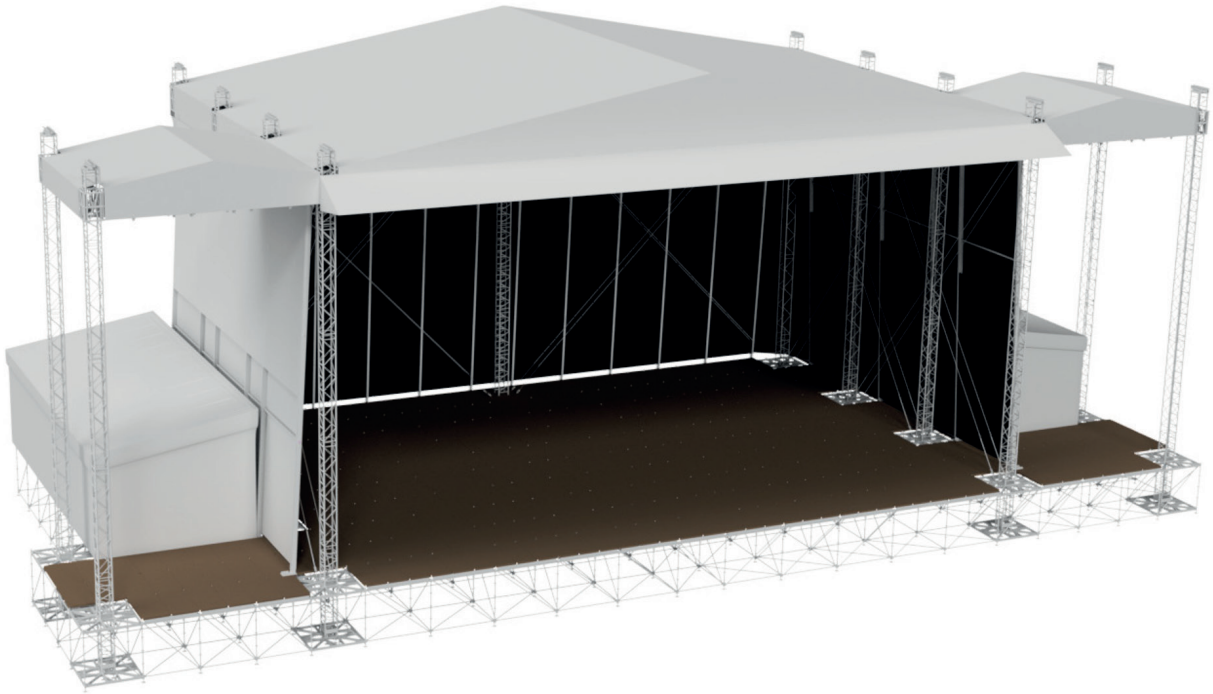

XXL Roof 20x20 m

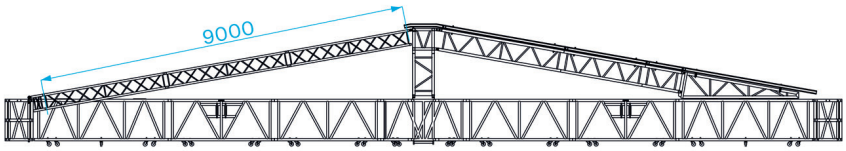

XXL Roof 25x20 m

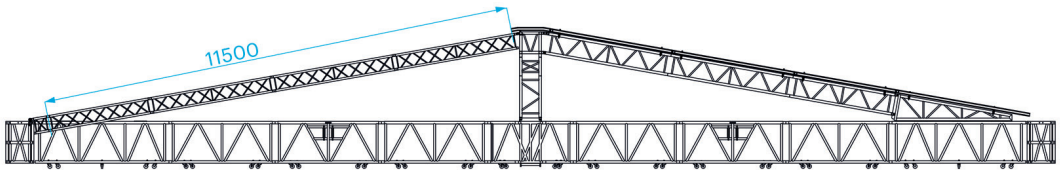

XXL Roof 30x20 m

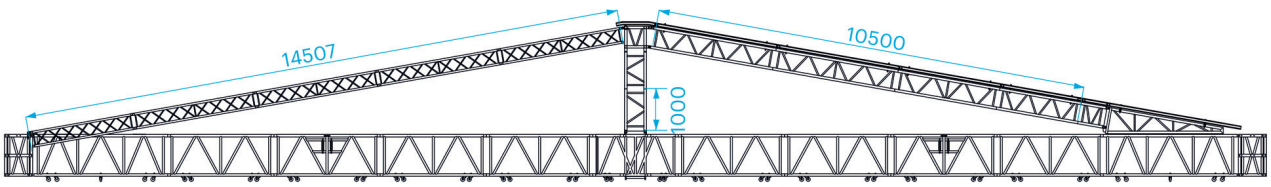

SPACE ROOF

Photo: Interstage, Project: Concert at Sea, The Netherlands

SYSTEM DESCRIPTION

The Space Roof is a modular roof system based on a space frame structure. The roof can be suspended from standard Prolyte CT or DT towers. The aluminium profiles combine with special node points to create a roof structure of any desired size or shape. The Space Roof can be built up to 37 x 22 meters in size. The specially designed top canopy guarantees efficient water drainage. Due to the complexity and size of the Space Roof, quotations are made on request only, allowing us to match your requirements with the possibilities this system offers.

INCLUDING

- Tension gear and steel wires
- Structural report
- Ballast solution
- Rain gutter at front sides

Advantages:

- Modular roof system, modular sizes possible
- Extremely high load-bearing capacity
- Efficient transportation due to very compact transport volume (approximately 1/6th of a comparable truss roof)
- Integrated rigging points
- Safe and easy rigging access due to 2 meters high frame and 8 centimeter wide profiles.
- Measurements comply with standard scaffolding systems
- Stage sub-structure needs minimum amount of diagonals, allowing for easy creation of corridors underneath

ROOF STRUCTURE	
Towers	C52T
Main grid	Space frame in a matrix size of 2072 x 2072 mm

TECHNICAL SPECIFICATIONS - Space Roof	
Dimensions	31 x 16 m (101' 5'' x 52' 6'') 31 x 20 m (101' 5'' x 65' 7'') 37 x 22 m (121' 5'' x 72' 2'') other sizes on request
Loading capacity	max. 30000 kg
PA loads	Additional PA load near front tower 4000 kg per side
Total self weight	approx. 35000 kg (max. size)
Max. wind speed	36,9 m/second, 82,5 mph

Canopy	Top, sides and back
Canopy colour	Standard: outside grey, inside black (other colours possible)
Soundwings	Optional, (yes Loading depends on size)
Ballast	Integrated in the bases
Cantilever	Yes
Side/Backstage	Yes. By means of angled keder profiles
Staging	Prolyte stage elements Probeam combined with a scaffolding stage or a Layher stage.

Photo: Starlight, Gothenburg

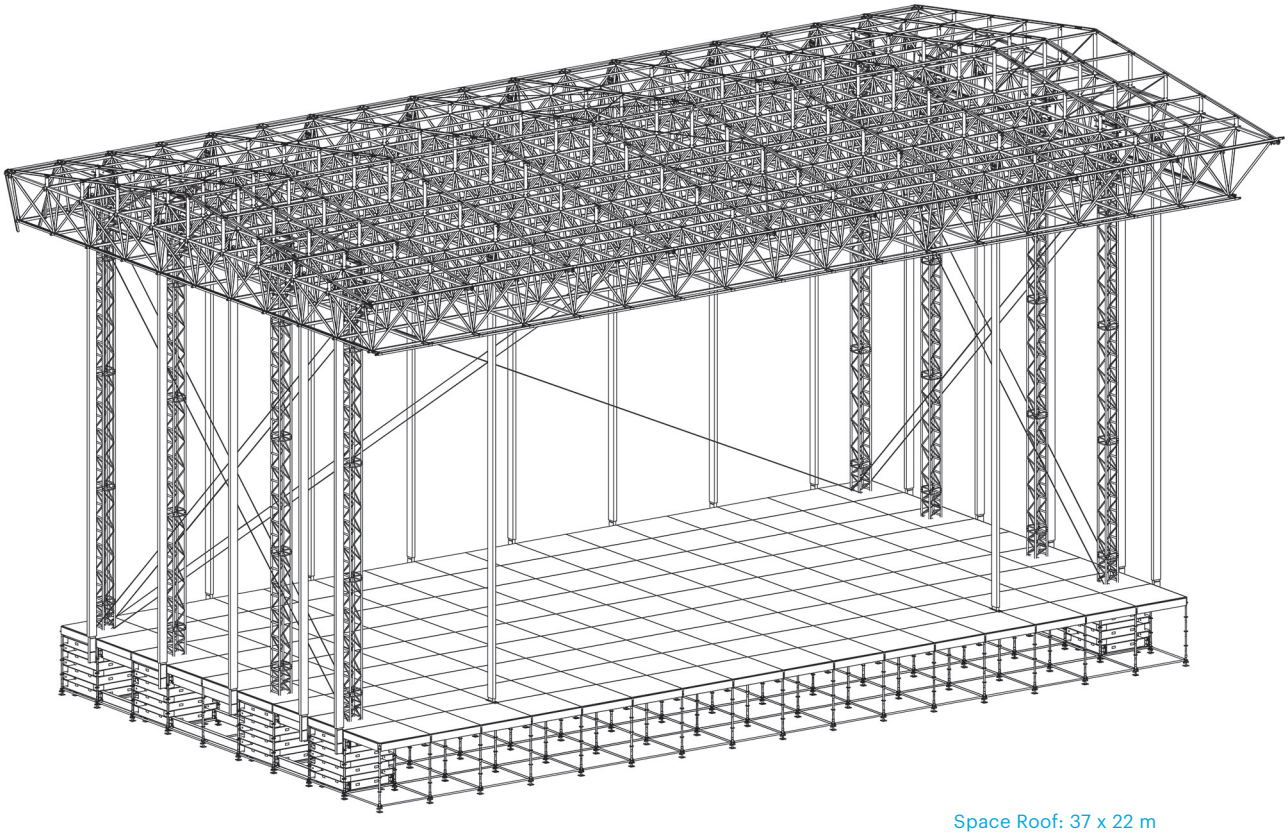

Space Roof: 37 x 22 m

Front view

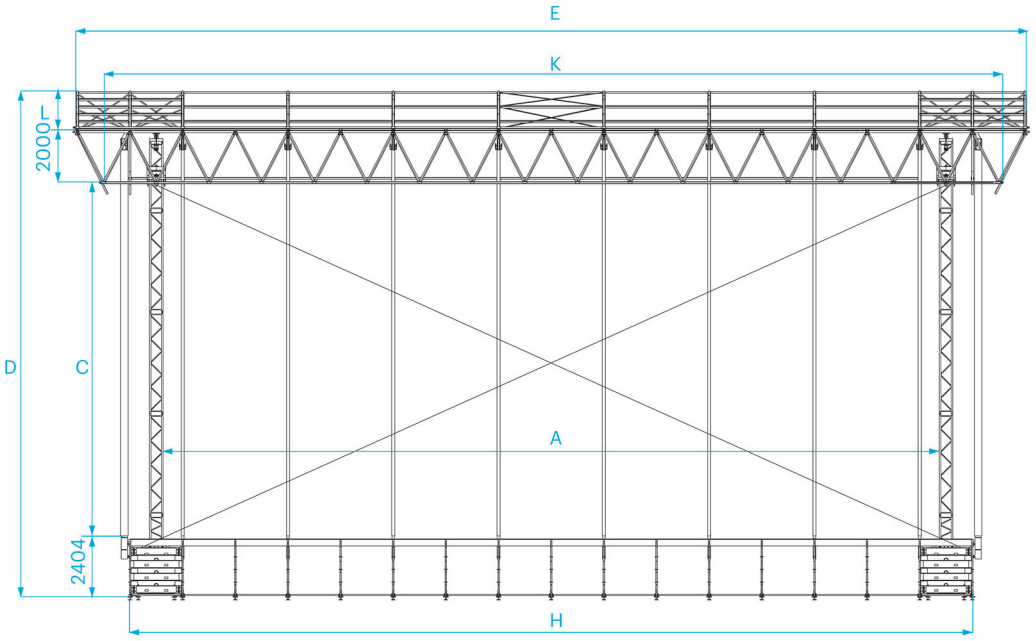

Side view

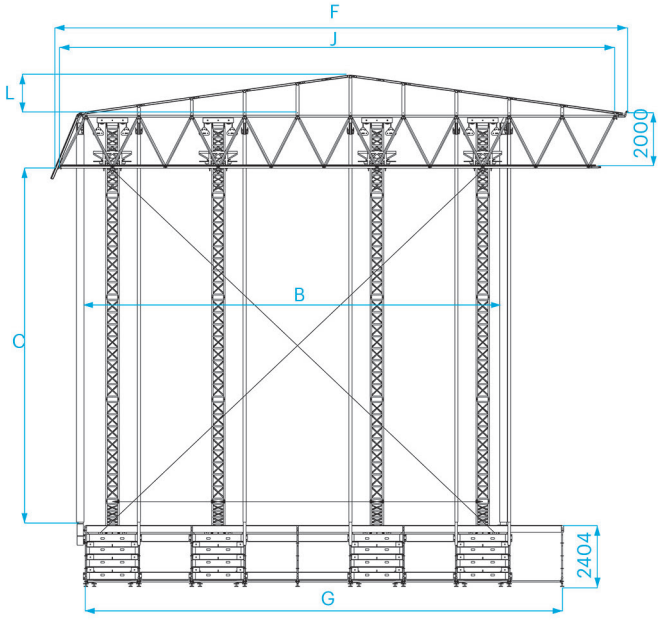

Space Roof System		Inside					
Stage measurements		A		B		C	
37 x 22 m	121'4" x 72'2"	30,55 m	100'2"	16,59 m	54'4"	14,00 m	45'9"
31 x 20 m	101'8" x 65'6"	24,33 m	79'8"	14,20 m	46'6"	10,00 m	32'8"
31 x 16 m	101'8" x 52'5"	24,33 m	79'8"	10,06 m	33'0"	10,00 m	32'8"

Space Roof System		Overall					
Stage measurements		D		E		F	
37 x 22 m	121'4" x 72'2"	20,06 m	65'8"	37,65 m	123'5"	22,62 m	74'2"
31 x 20 m	101'8" x 65'6"	15,91 m	52'2"	31,44 m	103'1"	20,54 m	67'4"
31 x 16 m	101'8" x 52'5"	15,91 m	52'2"	31,44 m	103'1"	16,40 m	53'8"

Top view

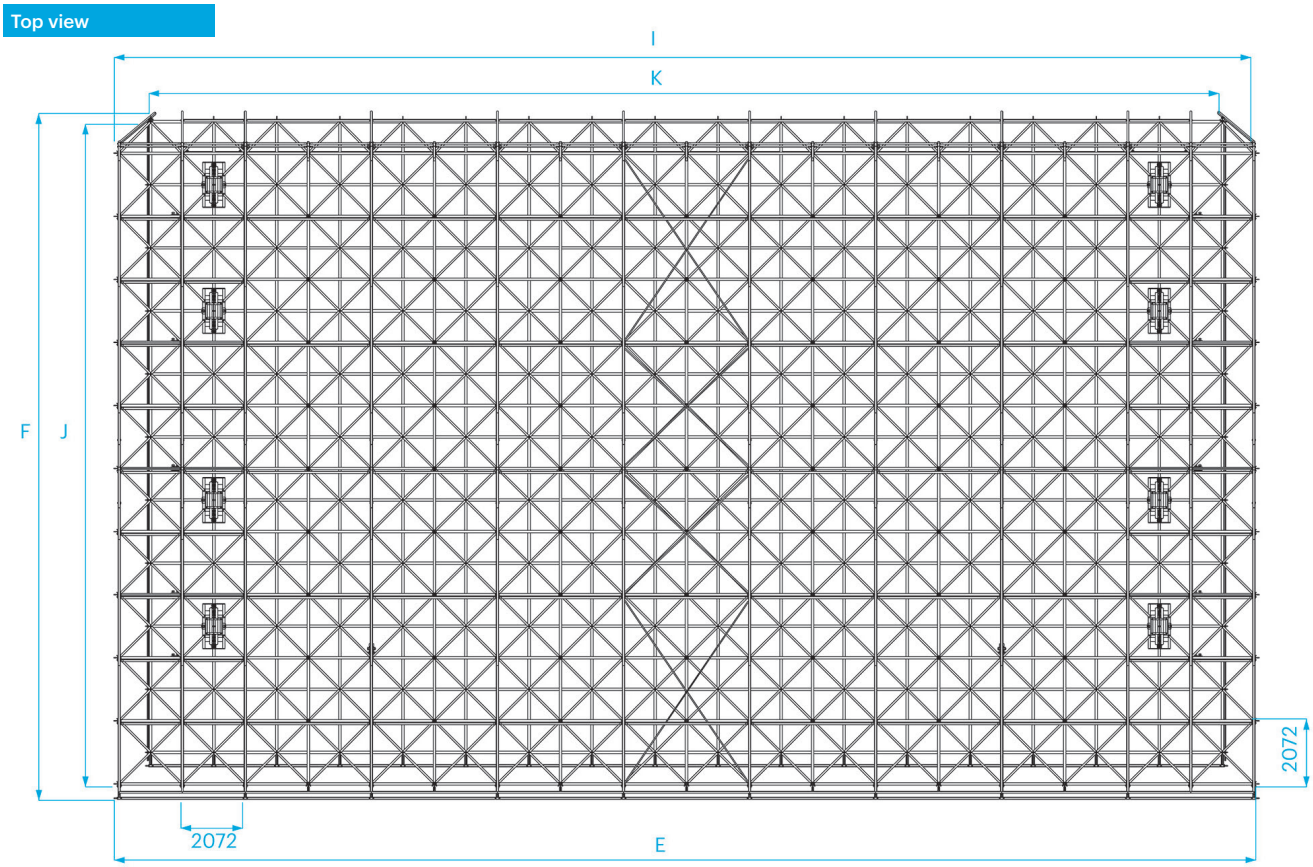

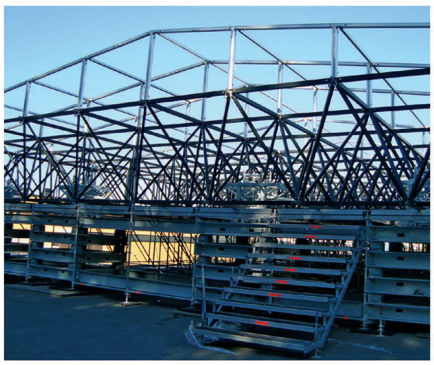

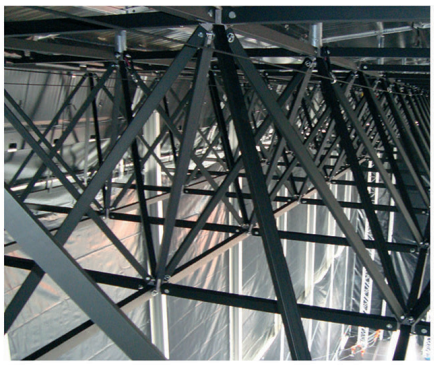

Space Roof System		Floor				Grid						Pitch roof	
Stage measurements		G		H		I		J		K		L	
37 x 22 m	121'4" x 72'2"	18,65 m	61'2"	33,15 m	108'8"	37,30 m	122'4"	21,76 m	71'4"	35,22 m	115'6"	1,57 m	5,2"
31 x 20 m	101'8" x 65'6"	16,58 m	54'4"	26,94 m	88'4"	31,08 m	101'9"	19,68 m	64'6"	29,01 m	95'2"	1,43 m	4'7"
31 x 16 m	101'8" x 52'5"	12,43 m	40'8"	26,94 m	88'4"	31,08 m	101'9"	15,54 m	50'9"	29,01 m	95'2"	1,14 m	3'7"

Photo: Neurotech, China
Photo: Neurotech, China

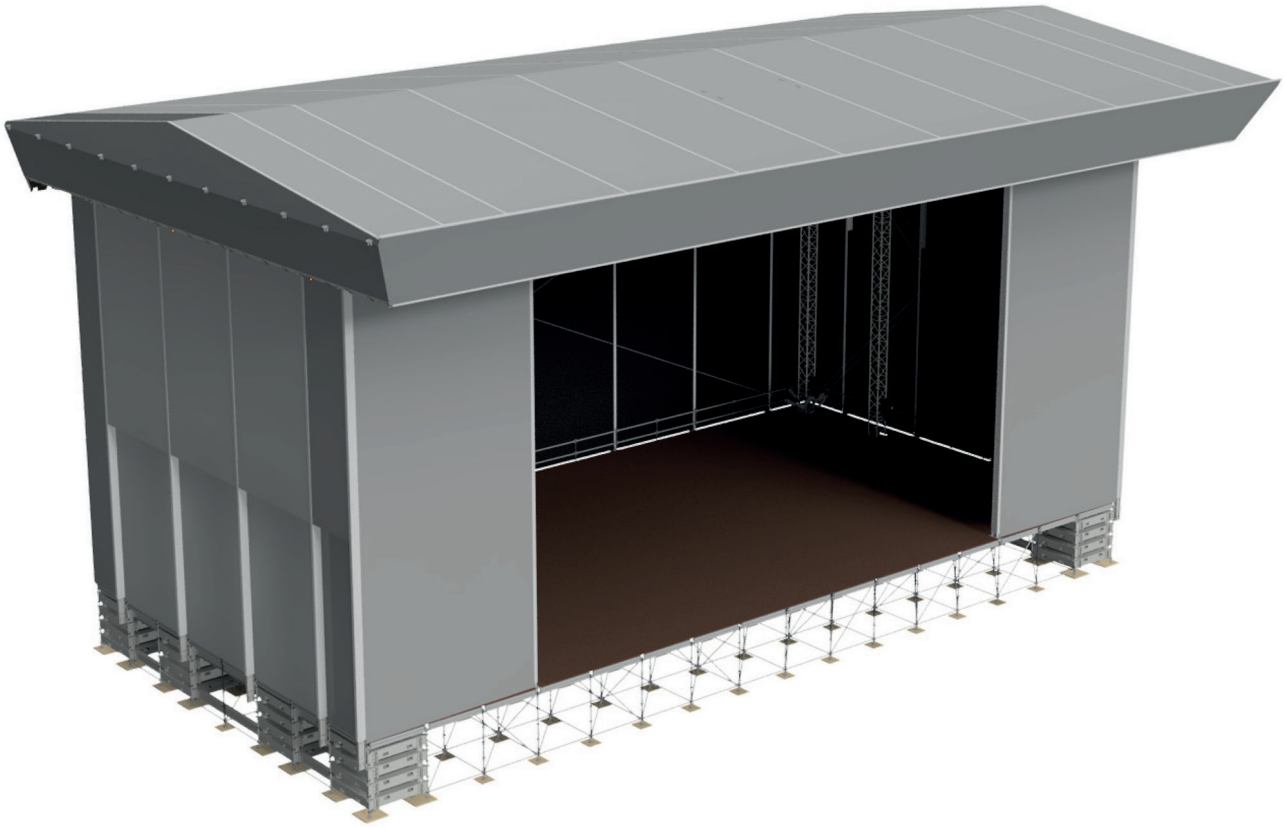

ZWARTE CROSS
Grolsch
PREMIUM PILSNER
HET LEVEN IS EEN GROOT FEEST!

RIKIE LOVES YOU!
ZWARTE KOSS

Photo: Rigging Services, UK. Project Galleries Lafayette

Content of Deck & Barrier Products

INTRODUCTION 190

LITEDECK 192

LITEDECK STAGING MODELS 193

LITEDECK LEG AND STEP SYSTEMS 194

LITEDECK HANDRAILS 195

LITEDECK ACCESSORIES 196

STAGEDEX 198

STAGEDEX STAGING MODELS 201

STAGEDEX LEG TYPES 202

STAGEDEX RAMP 203

EASYFRAME B 204

EASYFRAME C 205

PROBEAM 206

FLEXIBLE LAYHER ADAPTER 209

STAGEDEX EASYRAIL 210

STAGE EASYSTAIR SYSTEMS 213

STAGEDEX DOLLIES 216

STAGEDEX ASSEMBLY AND ACCESSORIES 217

BARRIERS 219

FIXED CORNERS 221

FLEXED CORNERS 222

SNAKEGATE 223

LINEUPGATE 224

DOLLY 225

Photo: Extreme, Jordan

PROLYTE
Feel. Fantastic.

Prolyte Deck

Deck product are the perfect accompaniment to truss systems and roof structures. Prolyte has developed a range of complementary products that provide you with one-stop-shop solutions. Ranging from stage systems to crowd control systems Prolyte offers extended solutions for in- and outdoor events. Over the years, Prolyte deck has developed into an independent product range, incorporating both LiteDeck and StageDex staging systems, crowd control systems and associated accessories including ProBeam, ramps, step units and handrails. Whether you have a dance performance, need multilevel staging, require a walkway or need integrated crowd control solutions, these flexible systems adapt easily to all demands.

Built on solid experience

If all the world's a stage, then it should live up to the expectations of modern day technology. Staging systems need to be portable, mobile, compact, and durable. They should be fit to use in a variety of configurations, require the minimum of tooling and come with a range of accessories. This is exactly what you can expect from the StageDex range. Prolyte's staging systems are lightweight yet offer very high loading capacities thanks to advanced design and manufacturing techniques. Furthermore, they comply with all applicable regulations.

LiteDeck

LiteDeck is one of the highest performing and most popular decking systems in the world of demanding touring productions. Tried and tested internationally, it is a lightweight yet robust staging solution that can be relied upon to perform. The LiteDeck system is available in a wide range of shapes and sizes, allowing hundreds of stage configurations to be created from

Photo: KoRn, De Oosterpoort, The Netherlands. Picture by Knelis

a relatively narrow stock of standard components. Coupled with the unique TopLok system makes this decking a designer's favourite. LiteDeck is available in either imperial or metric measurements, ensuring compatibility with structural formats across the world.

StageDex

StageDex staging is among the strongest and most versatile systems on the market for building temporary or demountable stages. The product of long-term practical experience, StageDex offers a solid solution to a variety of staging needs. Efficient and lightweight yet offering a high loading capacity, StageDex is ideal for all your business functions from conferences, award ceremonies and exhibitions to banquets, product launches and concerts. With StageDex you can create stunning structures and tailor-made platforms, entertainment stages or dance platforms.

The StageDex staging system is based on an aluminium frame made from a specially extruded profile. The plywood top board is glued to this frame to reduce noise and vibration. StageDex can be transformed quickly and easily, often without the need for tools. StageDex is available in either imperial or metric measurements, ensuring compatibility with structural formats across the world.

A new look, time and again

Using standard or customized finishes you can give your projects a fresh look, time and again. The transparent StageDex offers numerous possibilities to expand your banqueting options, create a colour changing dance floor or build catwalks, sloping car ramps or grandstands, where rotating or multi-level staging can create complex staging structures.

Several leg types and support frames complete your staging system, along with numerous accessories, which makes the StageDex staging system very adaptable for different circumstances.

Renowned for enduring performance and smart aesthetic design, LiteDeck is the most popular decking system in the demanding world of touring productions. Tried and tested around the world, it is a lightweight yet robust staging solution with a proven record of reliable performance.

TOP OPTIONS

A variety of options for the top board surface completes the LiteDeck range. Provided as standard is our most popular finish, a durable 19 mm plywood painted matte black connected (as with all tops) by a set of bolts which allow removal, maintenance and replacement over the life of the deck. For more elaborate applications, LiteDeck is also available with clear acrylic tops to allow the transmission of lights from under the stage.

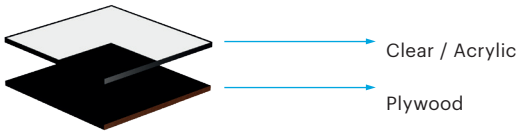

Description	Technical	Code
Macrolon Top	19 mm Hardened Acrylic	Standard deck code followed by Mac

* Please note, special legs (6 mm shorter) are required with this top configuration.

STRUCTURALLY APPROVED

LiteDeck system is designed to provide a 5 kN/m² uniform load rating in all configurations when used in compliance with our assembly guidelines. Only genuine LiteDeck components should be used, and full design calculations and assembly layouts are available on request.

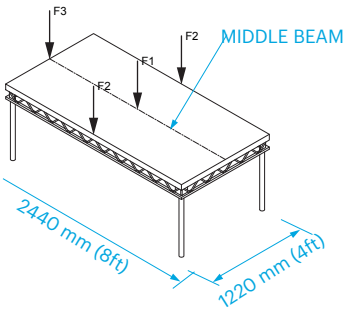

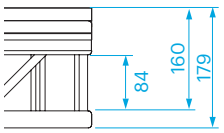

Side view

Loading types	
Uniformly distributed load	500 kg/m²
Pointload F1	360 kg
Pointload F2	360 kg
Pointload F3	360 kg

The pointload should be applied to a minimum area of 50 x 50 mm.
Pointload to be placed as indicated on drawing. 1 pointload total allowed.

TOPLOK SYSTEM

Introduced specifically in response to feedback from touring productions, the optional TopLok system offers time savings (with crew and cost benefits) in assembling any stage configuration. Utilising an integrated claw catch design, decks can be joined from above with the single turn of an Allen key, ensuring the fastest possible build and strike times.

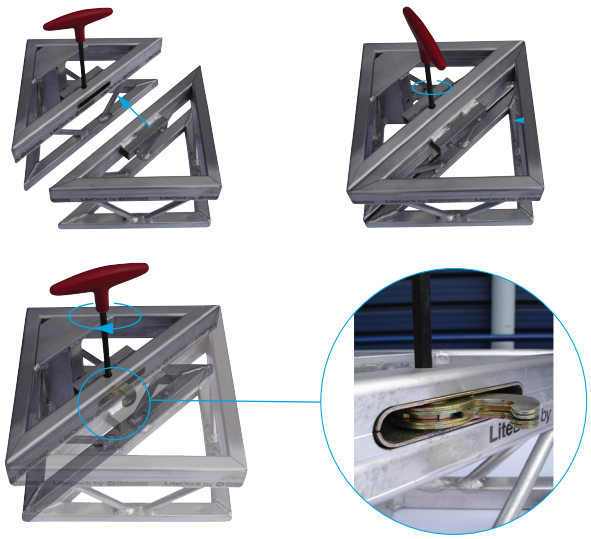

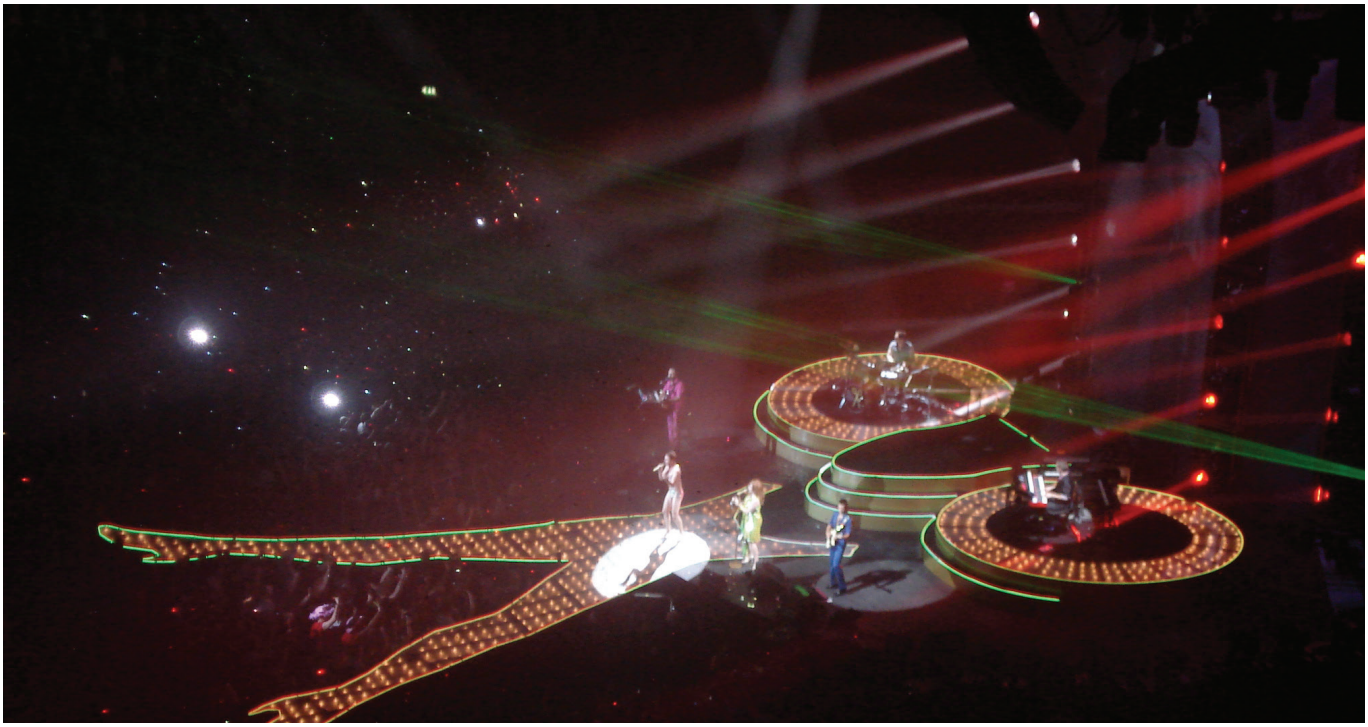

Photo: Scissor Sisters

SHAPES AND SIZES

The LiteDeck system is available in a wide range of shapes and sizes, allowing hundreds of stage configurations to be created from a relatively narrow stock of standard components. LiteDeck is also available in either imperial or metric measurements, ensuring compatibility with structural formats across the world.

* LiteDeck weights are based upon standard units, without TopLok and with the inclusion of 19 mm plywood tops. Other configurations will differ in weight.

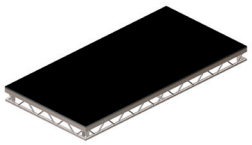

Size	Code	TopLok Code	Weight*
4′ x 2′	LD-42FT-S	LD-42FT-TL	17,00 kg
8′ x 4′	LD-84FT-S	LD-84FT-TL	49,00 kg
2 m x 1 m	LD-21M-S	LD-21M-TL	36,00 kg

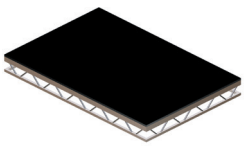

Size	Code	TopLok Code	Weight*
6′ x 4′	LD-64FT-S	LD-64FT-TL	33,50 kg

Size	Code	TopLok Code	Weight*
8′ x 2′	LD-82FT-S	LD-82FT-TL	36,00 kg

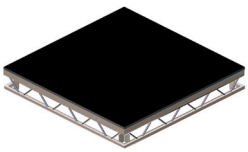

Size	Code	TopLok Code	Weight*
4′ x 4′	LD-44FT-S	LD-44FT-TL	27,50 kg
1 m x 1 m	LD-11M-S	LD-11M-TL	21,00 kg

Size	Code	TopLok Code	Weight*
4′ x 4′	LD-44FT-S-IQ	LD-44FT-TL-IQ	13,50 kg

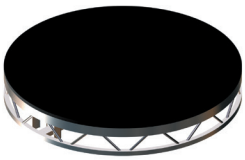

Circular Decks

Available on request.

Size	Code	TopLok Code	Weight*
4′ x 4′	LD-44FT-S-RA	LD-44FT-TLP-RA	19,50 kg
1 m x 1 m	LD-11M-S-RA	LD-11M-TLP-RA	14,50 kg

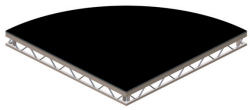

Size	Code	TopLok Code	Weight*
4′ x 4′	LD-44FT-S-Q	LD-44FT-TLP-Q	27,00 kg
1 m x 1 m	LD-11M-S-Q	LD-11M-TLP-Q	21,00 kg

Semi Circular Decks

Available on request.

LITEDECK LEG SYSTEM

LiteDeck is designed around a universal leg system constructed from standard 48 mm x 4 mm round section aluminium tubes. All LiteDeck legs are constructed from high grade 6082T6 tubes, and are supplied cut to length.

Code	Description	
LDL-16,5	Stage height 19 cm	Leg 16,5 cm
LDL-35,5	Stage height 38 cm	Leg 35,5 cm
LDL-54,5	Stage height 57 cm	Leg 54,5 cm
LDL--73,5	Stage height 76 cm	Leg 73,5 cm
LD-92,5	Leg 92,5 cm	Stage height 95 cm

Shape	Size	Quantity
	8′ x 4′	4
	6′ x 4′	4
	8′ x 2′	4
	2 m x 1 m	4
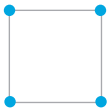	4′ x 4′	4
	1 m x 1 m	4
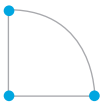	4′ x 4′	4
	1 m x 1 m	4
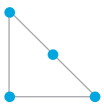	4′ x 4′	3
	1 m x 1 m	3
	4′ x 4′	3
	1 m x 1 m	3

Handrails are a key component in creating safe and useable working platforms. All LiteDeck handrail products are constructed from 6082T6 aluminium, and are designed to bolt, quickly and securely, to specific mounting points located on the side of each deck.

LiteDeck handrails are available in two configurations, with the appropriate handrail system dependent upon the application and therefore the required legislative conformity.

OPEN HANDRAILS

This lightweight design is suitable for staging applications where the area will not be used for public access.

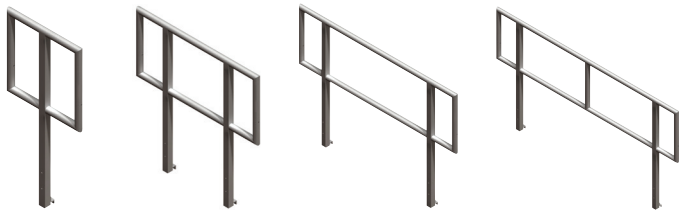

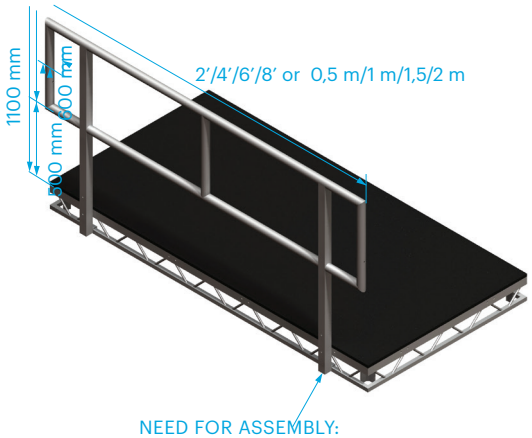

Imperial	2' Rail	4' Rail	6' Rail	8' Rail
Length	2'	4'	6'	8'
Weight	3,5 kg	6,4 kg	7,2 kg	8,4 kg
Code	LD-HS2	LD-HS4	LD-HS6	LD-HS8

Metric	1 m Rail	2 m Rail
Length	1000 mm	2000 mm
Weight	6,14 kg	7,8 kg
Code	LD-MH51	LD-MH52

NEED FOR ASSEMBLY:

Description:	Code:
M10 x 90, 8.8 DIN931	BM-M10X090
Wsh M10 Spring DIN127B	BM-M10-SW
Nut M10 DIN934	BM-M10-N

SPOKED HANDRAILS

This design incorporates vertical rails to offer protection where the area will be open to public access. The apertures conform to British Standard regulations and therefore the product complies with typical exhibition hall stipulations.

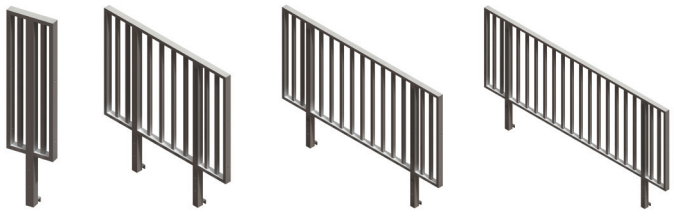

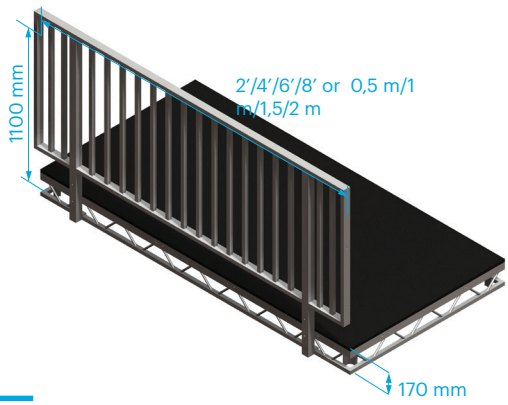

Imperial	2' Rail	4' Rail	6' Rail	8' Rail
Length	2'	4'	6'	8'
Weight	6,2 kg	12,3 kg	15,3 kg	18,6 kg
Code	LD-HS2E	LD-HS4E	LD-HS6E	LD-HS8E

Metric	1 m Rail	2 m Rail
Length	1000 mm	2000 mm
Weight	10,8 kg	16,1 kg
Code	LD-MHS1E	LD-MHS2E

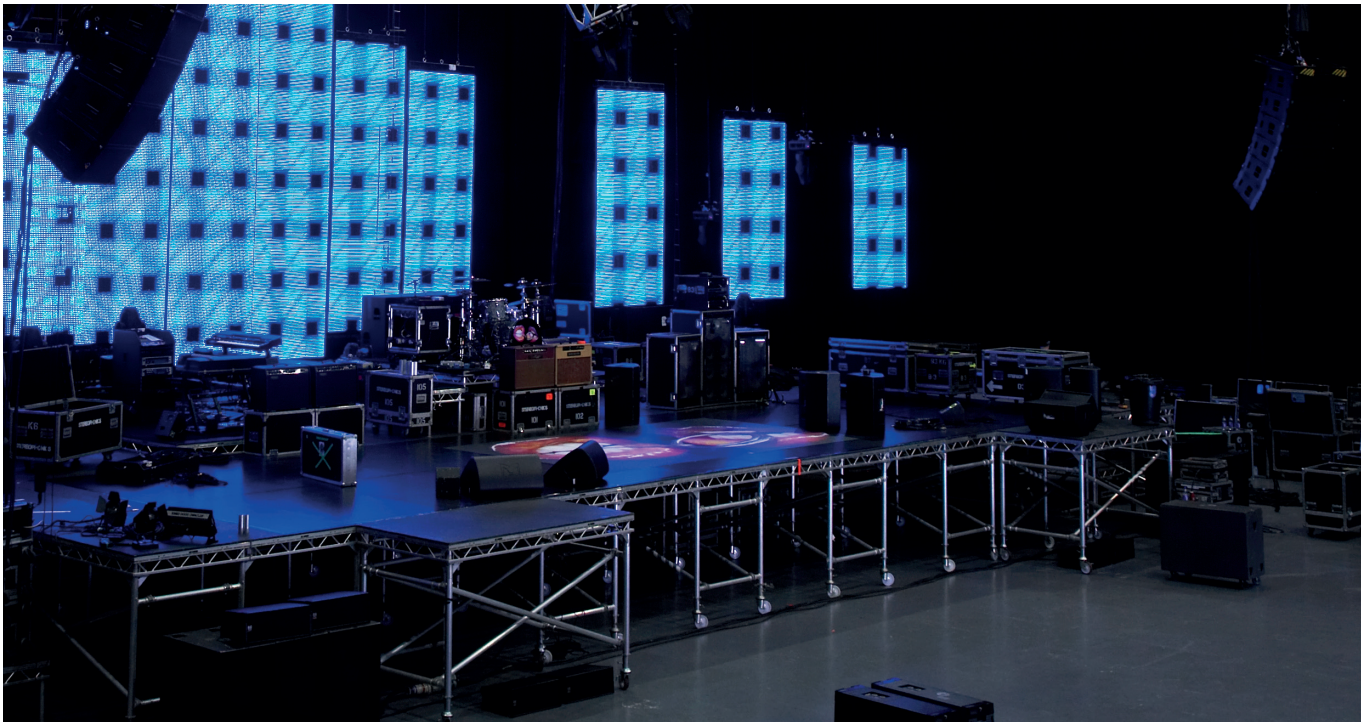

Photo: Stereophonics.

The LiteDeck range is further enhanced by a range of accessories designed specifically to increase the speed and ease of build whilst maintaining the inherent safety aspect of any stage design. Many of these LiteDeck accessories have been developed on tour, and as such are both quick to use and extremely robust.

Description:	Code:
Nut M10 DIN934	BM-M10-N

Description:	Code:
M10 x 70, 8.8 DIN931	BM-M10X070

Description:	Code:
Spring Washer M10 DIN127B	BM-M10-SW

Photo: Rigging Services, UK. Project Galleries Lafayette

StageDex is based on a special extruded aluminium profile. The top board is glued to the frame to reduce noise and vibration. All decks are available in metric and imperial sizes.

TOP LINE SERIE

- Internal reinforcement of corner
- Standard spigot entry on the topside of the deck to attach EasyRail system
- Birch plywood, water resistant quality
- Glued in 15 mm wooden plate
- Non-slid hexagon layer
- Loading capacity 750 kg/m^2

- Top option; Birch plywoood, unfinished, indoor use only.
- Top option; Birch plywoood, clear varnish, indoor use only.
- Top option; Birch plywoood, black coating, indoor use only.
- No reinforced corner solution.
- Glued in 15 mm wooden plate.
- Loading capacity 750 kg/m^2

BASIC LINE SERIE

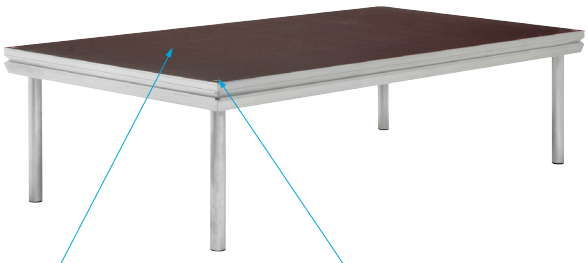

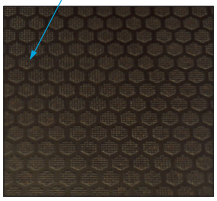

SM-D-T
Birch plywood non slid top layer, non permanent outdoor use

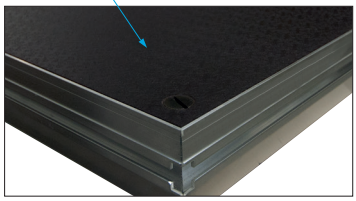

Topline frame, reinforcement corner

SM-DL-U
Birch plywood, unfinished, indoor use only

SM-DL-C
Birch plywood, clear varnish, indoor use only

SM-DL-B
Birch plywood, black coating,
indoor use only

Photo: Extreme, Jordan

SPECIAL TOP OPTION

- Luxurious transparent decks for special applications. The transparent top board is made from durable, scratch-resistant Acrylic.
- Load capacity 500 kg/m²
- Can be combined with regular StageDex.
- Clear / acrylic top plate
- Frosted / acrylic top plate
- Maximum allowable temperature 70°C

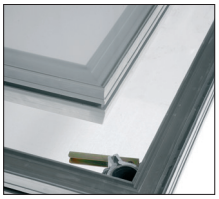

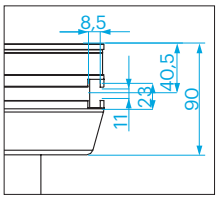

SM-DL-D Clear
SM-DL-DF Frosted

CLEVER PARTS THAT MAKE THE DIFFERENCE

1. Choose a top line frame to have the advantages of a top-based spigot entry, which allows simple and efficient mounting of handrails.

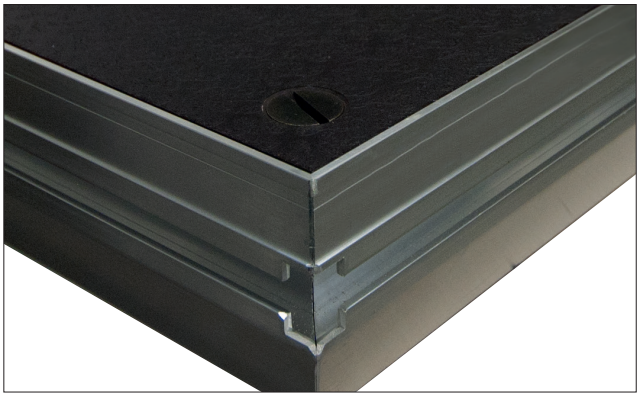

2. The universal leg fitting can hold square as well as round types of legs and fixates with one simple handle. The multifunctional profile offers several add-ons.

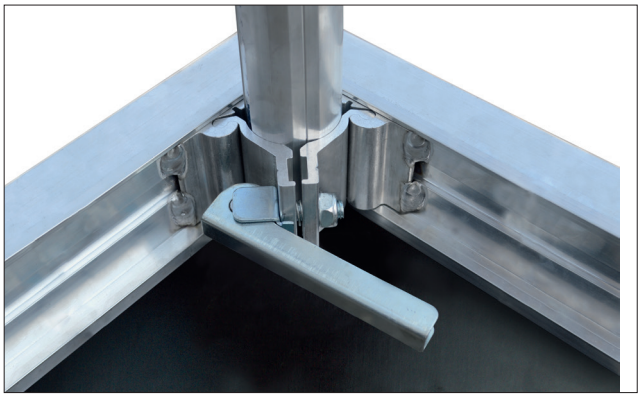

STAGEDEX TECHNICAL SPECIFICATIONS AND A ALLOWABLE LOADS

Allowable loading for different leg types

LEG TYPES	UNIFORMLY DISTRIBUTED LOAD kg/m²				
STAGE HEIGHT IN CM	**80 cm**	**100 cm**	**120 cm**	**160 cm**	**180 cm**
StageDex: Tube 43 x 3 (EN AW 6082 T6)	750	500	500	350	n.a.
LiteDeck: Tube 48 x 4 (EN AW 6082 T6)	750	750	500	500	350
Profile 40 x 40 x 3 (EN AW 6082 T6)	750	500	500	500	350
Tube 48 x 3 (S235JR)	450 < 800 mm	800 < 1200 mm		1200 < 1400 mm	
Telescopic leg	750 kg	500 kg		350 kg	

= Prolyte standard tube

n.a. = not allowed
all data based on a standard deck of 2 x 1m

Technical Specifications

Types	standard, standard arched, basic
Frame	Aluminium (EN AW 6063 T6)
Top board	Plywood
Legs	48 x 3 mm (EN AW 6082 T6)
Legs with adjustable feet	48 x 3 mm (EN AW 6082 T6), with steel spindle on pvc base
Telescopic leg	48 x 4 / 60 x 5 mm (EN AW 6082 T6)
Maximum load	750 kg/m² UDL
Self weight	35,6 kg

Calculated with 1/10 of the vertical load transfered into a horizontal load (conform DIN 15921 / EN 13814)

Loading types (for all decks except Acrylic)	
Uniformly distributed load	750 kg/m²
Pointload F1	350 kg
Pointload F2	210 kg
Pointload F3	500 kg

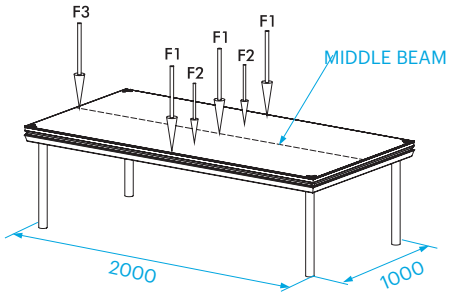

The pointload should be applied to a minimum area of 50 x 50 mm.
Pointload to be placed as indicated on drawing. 1 pointload total allowed.

DO

- Check to ensure the stage floor is properly aligned and completely level.
- Check the application conditions of your stage, as the type of use is directly related to safety issues like handrails.
- Brace your staging legs when needed for stability.
- Make sure all stage elements are interconnected.
- Take notice of local regulations for stages and allowed purposes.
- Store StageDex upside down to decreases setup time.
- Maintain your StageDex at regular intervals.
- Inform your crew beforehand on safety procedures (like evacuation procedures) in case of emergency situations.
- Make sure your construction is properly grounded.

DO NOT

- Use materials in poor condition, the payload might be reduced substantially.
- Apply loads before knowing their exact weight and size.
- Exceed the maximum allowable load.
- Use unfinished StageDex top board in outside conditions.
- Exceed the maximum building height of the stage or its support frame.
- Use the hang-on profile without reducing the maximum allowable payload.
- Build your stage on unstable ground.
- Use StageDex elements as ballast for your roof without using the proper support frame.

NEED TO KNOW MORE?

Please go to www.prolyte.com for more technical information on StageDex systems, manuals and loading tables. In the Prolyte BlackBook (technical background information) we provide more in-depth technical knowledge on stages and stage floors.

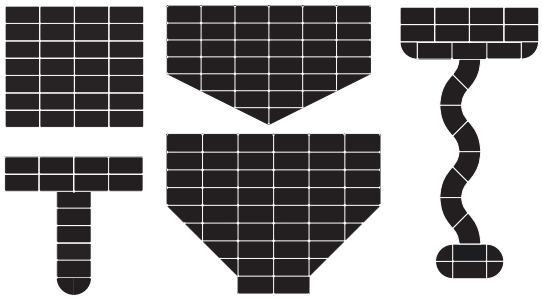

USE YOUR IMAGINATION

What if the systems flexibility would not limit your imagination in designing and building staging constructions? StageDex offers endless flexibility to create the designs you require, a variety of standard sizes and shapes as well as easy and often tool less mounting makes construction an easy task.

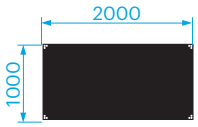

SM-D-T-200100

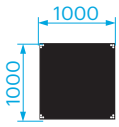

SM-D-T-100100

SM-D-T-200050

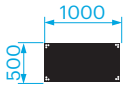

SM-D-T-100050

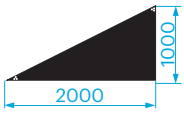

SM-D-T-5L

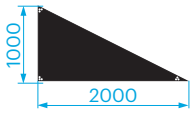

SM-D-T-5R

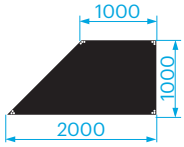

SM-D-T-6L

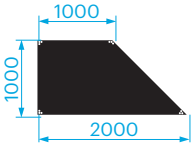

SM-D-T-6R

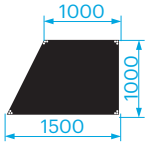

SM-D-T-7L

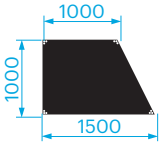

SM-D-T-7R

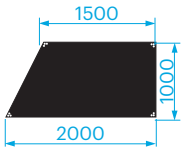

SM-D-T-8L

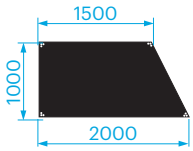

SM-D-T-8R

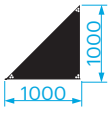

SM-D-T-9

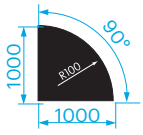

SM-D-T-R100

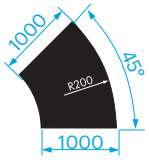

SM-D-T-R200

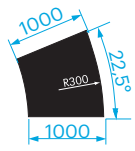

SM-D-T-R300

CIRCULAR STAGES

Prolyte is able to fabricate circular stages that are actually based on curved segments. Each section or segment is handbuild by our craftsmen, therefore small differences in size and shape may occur.

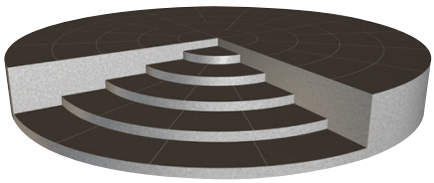

STANDARDS

Standards that apply to stages and temporary constructions:

DIN EN 1990 / Eurocode 0	Basis of structural design
DIN EN 1991 / Eurocode 1	Actions on structures
DIN EN 1993 / Eurocode 3	Design of steel structures
DIN EN 1995 / Eurocode 5	Design of timber structures
DIN EN 1999 / Eurocode 9	Design of aluminium structures
DIN EN 13814	Fairground and amusement park machinery and structures - safety
DIN 15921	Entertainment technology - Aluminium platforms and frames - Safety requirements and testing

STAGEDEX LEG TYPES

The StageDex leg attachment system provides a straightforward yet ingenious engineering solution that assures fast, safe stage constructions.

- No tools needed
- The legs are fitted to the deck frame and are fixed in position by one simple handle
- Round as well as square legs can be mounted in the leg attachment system

Notice: The types of legs, and the length of the legs that are used, will determine the amount of loading that is allowed. Be sure to always check the loading table before you apply any loads to the decks.

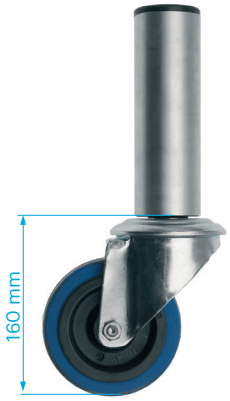

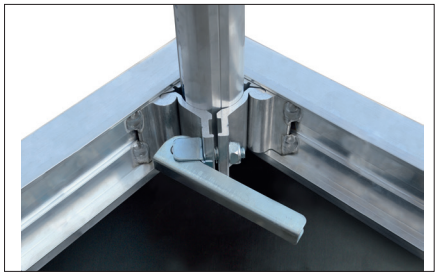

STANDARD LEGS
Round aluminium tube 48 x 3 mm in heights of 200-1000 mm.
Code: SM-L-••A

ADJUSTABLE LEGS
Round aluminium tube 48 x 3 mm in heights of 200-1000 mm, with adjustable feet. Maximum angle of 5°.
Code: SM-L-••A-ADJ

LEGS WITH FITTED CASTORS
Round aluminium tube 48 x 3 mm in heights of 300-1000 mm, with castor or castor with break.
Maximum of 160kg per leg with castor.
Code: SM-L-••-CAS-01 = single leg with castor
SM-L-••-CAS-02 = single leg with castor/brake
SM-L-••-CAS-03 = double leg with castor
SM-L-••-CAS-04 = double leg with castor/brake

TELESCOPIC LEGS
StageDex unique telescopic leg combines adjustable height and high loading capacity.
- Sturdy road-rugged mechanism
- Build-in tape measure for easy mounting

HOW DOES IT WORK?
- Release the two M10 hexagon socket head screws or crank handles.
- Extend the leg to its required length
- Lock the leg at both positions to guarantee optimal grip of the telescopic mechanism
- Measurements on the inside of the profile indicate the total length of the leg and safe operating areas
- Rubber leg caps prevent damage to your flooring system

TELESCOPIC LEGS - Standard available Lengths and Codes

CODE	Description
SM-L-45/60-ADJ	Telescopic leg 600-900 mm
SM-L-60/90-ADJ	Telescopic leg 600-900 mm
SM-L-90/140-ADJ	Telescopic leg 900-1400 mm
SM-L-ACC-01	Crank M10x25 for telescopic leg. This can be used instead of the screws.

STAGEDEX RAMP

Designed to further expand the possibilities of the StageDex range, the multipurpose StageDex Ramp offers a perfect solution for rolling equipment on and off stage, wheelchair access, or more creative applications such as car shows, walkways and fashion catwalks.

The StageDex Ramp comprises of three basic elements:
- Standard StageDex staging
- Adjustable legs fitted with stabilizers (SM-RP-L-ADJ-...)
- Aluminium side profiles (SM-RP-BE2)

The specially designed side profiles have been engineered to absorb the forces from heavy loads, such as cars, meaning the StageDex Ramp can withstand up to 750 kg/m – the same allowable loading as standard StageDex staging.

The Ramp has a standard sloping angle of 7,5 degrees, but is adjustable between 0 and 22 degrees using a plate connected to the legs. This system ensures the resulting forces from loading are transferred at the correct angle into the leg. Notches on top of the profiles keep the staging in place once the ramp is built. A standard coupling profile allows the sloping section to be connected to staging at either end.

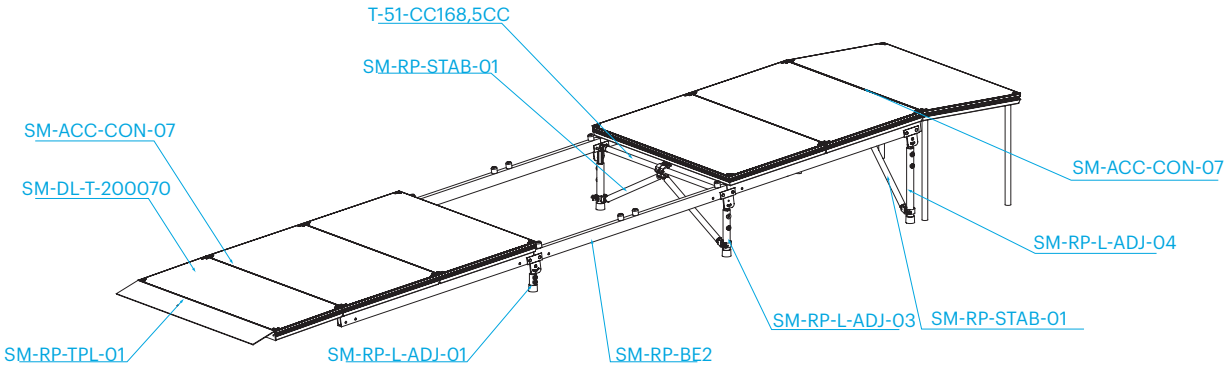

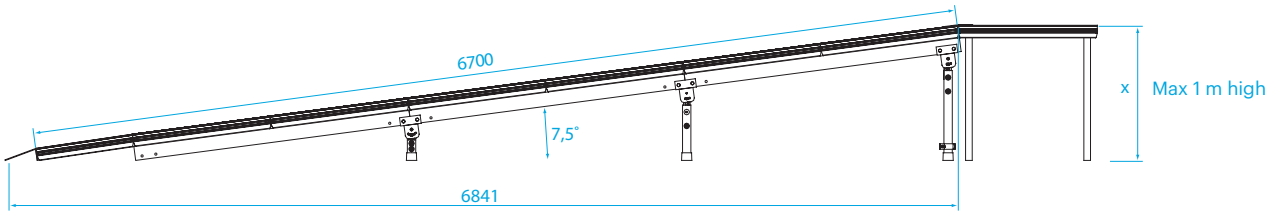

Photos: Prolyte

EASYFRAME B

System Description:

EasyFrame B is a support frame suitable for indoor or outdoor use. The frame racks are available in several heights and lengths. The frames connect to the legs with a standard 4-way connection by means of a locking pin. Due to the closed topside, assembly is possible with only one technician. After positioning, the frames are stable and freestanding, and will not topple over. Spindle feet, placed in the bottom of the frames, make it possible to level the stage at an exact position and to vary the height of your stage floor.

Advantages:

- Can absorb horizontal forces resulting from eventual wind forces on the roof.
- Interfaces for smaller Prolyte roof systems available.
- Fit for various brands of staging by using special adapters to secure your decks.
- The maximum allowable load of 750 kg/m² and 10% horizontal load are guaranteed.
- Standard stage elements provide your stage floor.
- Fast assembly, no tools and a minimum amount of loose parts.

Code:	
SM-F-B-R• 000100	Rack 1000 mm height, minimum stage floor height variable between 1200-1540 mm.
SM-F-B-R• 000150	Rack 1500 mm height, minimum stage floor height variable between 1700-2040 mm.
SM-F-B-R• 000200	Rack 2000 mm height, minimum stage floor height variable between 2200-2540 mm.

Ballast system:

Stages are often used in combination with temporary roof structures. If used correctly, the weight of your stage floor may lower the ballast values of your roof construction. The EasyFrame B support system is constructed such that the complete stage floor is interconnected. If the stage is lifted at one end, the complete stage will be lifted. Only constructions that comply with these criteria may act as ballast system for roof constructions. Apart from this fact, the EasyFrame B is suitable to absorb the horizontal forces resulting from the base sections of the roof towers. Prolyte can supply interfaces for the smaller Prolyte roof systems.

STEP 1
Place the leg with 4-way joint (SM-F-B-L....) where wanted. The leg is available in lengths of 1000 mm, 1500 mm and 2000 mm.

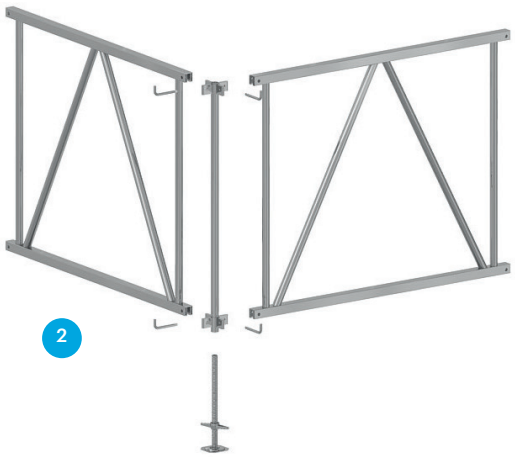

STEP 2
Connect the frame rack (SM-F-B-R....) to the leg and fix with the L-pin (SM-F-A-LP16). The ladder frames connect to the 4-way joint by means of a pen/fork connection which is closed on the top side (the fork "rests" on the pen). After positioning, the parts can stand free, without toppling over. This makes the assembly of the locking pin easy.

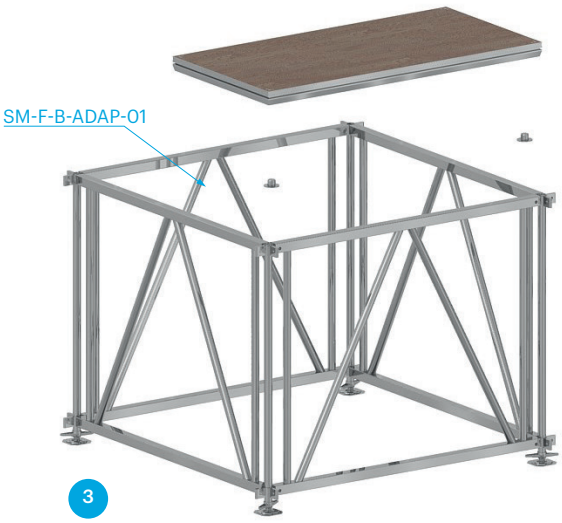

STEP 3
Place the deck-to-frame adapter (SM-F-B-ADAP-01) in the leg fittings of your deck. Place the decks on top of the assembled frames. Level the stage by means of the spindle feet in the legs.

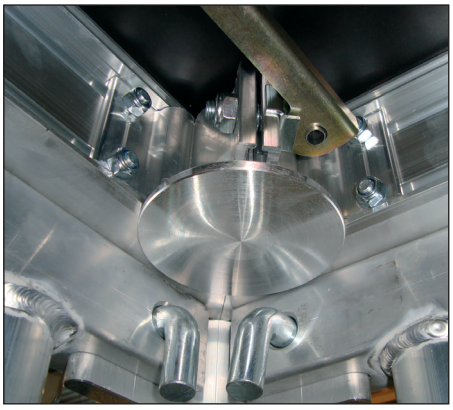

DECK TO FRAM ADAPTER
In order to safely mount the decks to the EasyFrame B system, Prolyte has developed the deck-to-frame adapter. This adapter is mounted in the leg connection and prevents any horizontal movement of the decks.

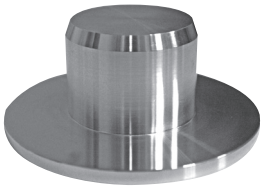

(SM-F-B-ADAP-01)

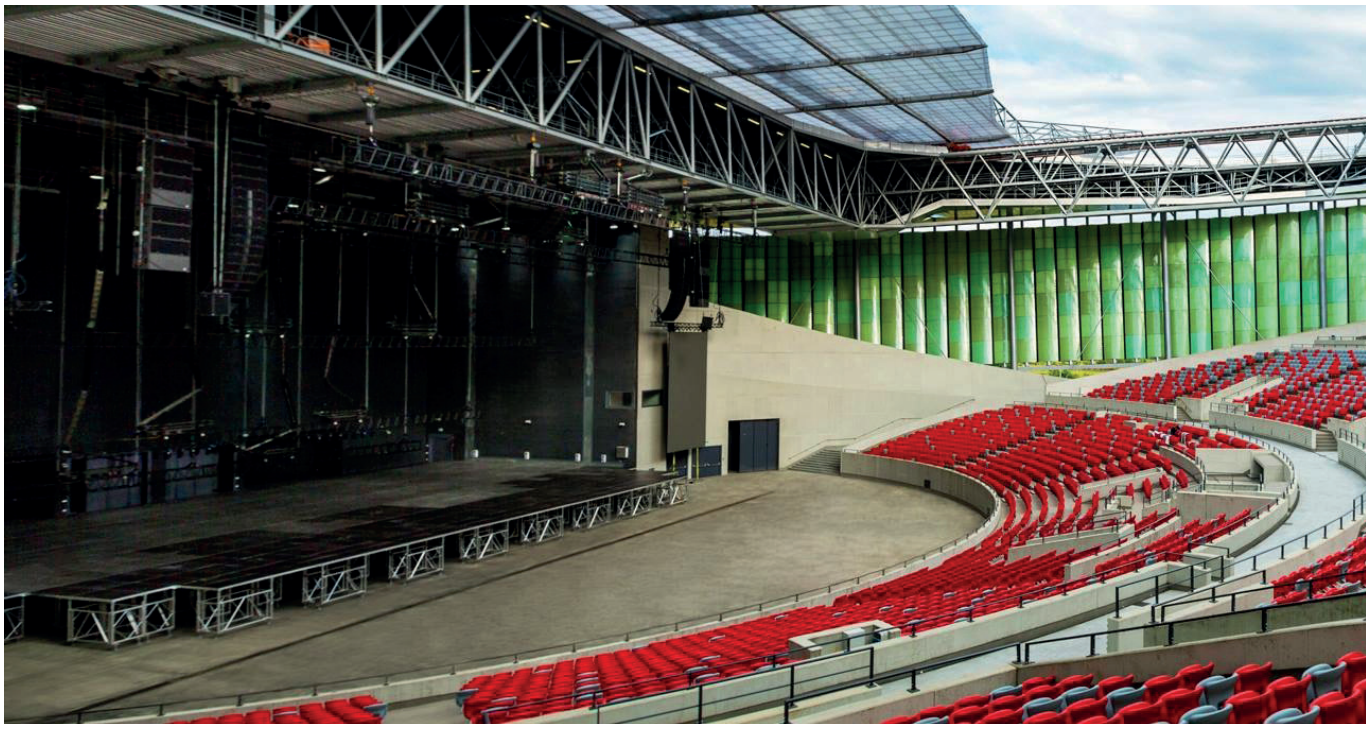

Photo: Scenos Techninis Servisas, Black Sea Arena, Georgia.

EAST FRAME C

System Description:

Based on customer experience, Prolyte created a multipurpose support frame that provides the ultimate in configuration flexibility. EasyFrame C is equally adaptable to use for stages, seating areas or tribunes.

A strategic investment:

The StageDex EasyFrame C can be used for flat stages as well as raised platforms or bleachers (tribunes). This makes the initial investment very economical, since only one system needs to be purchased for several applications. Ease of assembly also reduces build-up times. Free corridors, which can be created under the stage, allow for handy storage space for your empties and also serve as the ideal location for dimmer city or other uses.

Easy does it:

The setup of an EasyFrame C is fast, straightforward and requires only one tool. Due to the use of lightweight material, only one technician is needed to handle each part.
There are two basic types of EasyFrame C: sub frame 1 varies in height between 100-150 cm, while sub frame 2 varies between 160-270 cm. All intermediate steps are either standard or tailor-made by means of the hole distance in the inside legs.
Optional screw jacks provide levelling, or optional castors give you the opportunity to build a RollingStage as well. Standard StageDex are fitted to the top of the EasyFrame C system with a StageDex adapter, which fixes the decks horizontally as well as vertically.

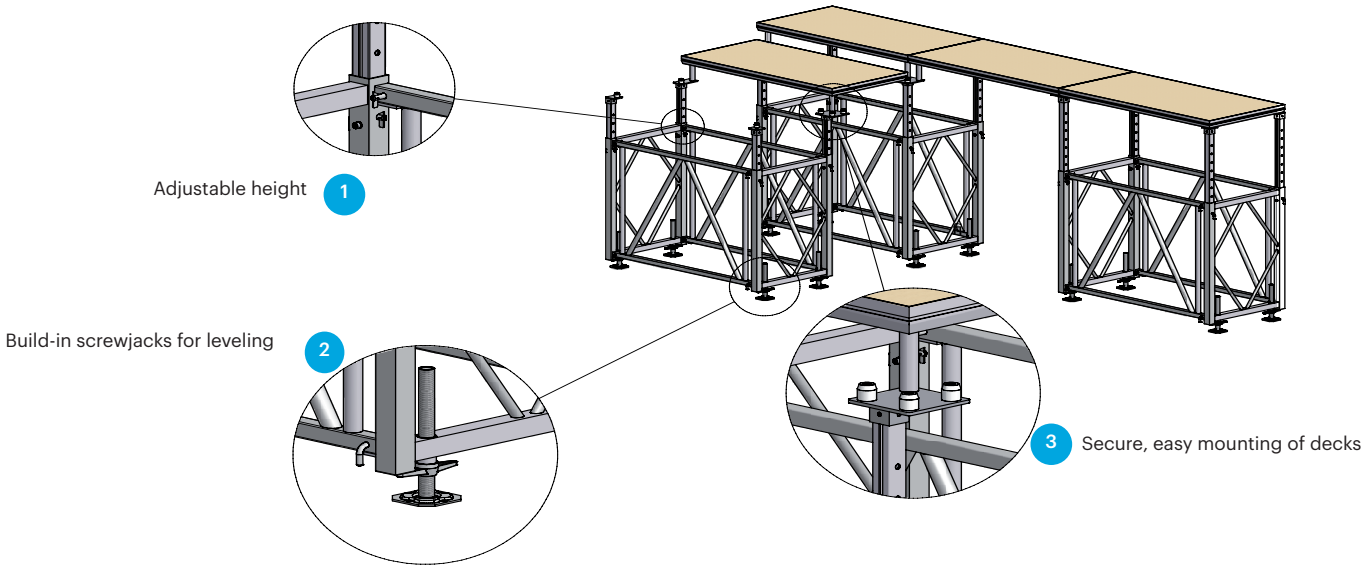

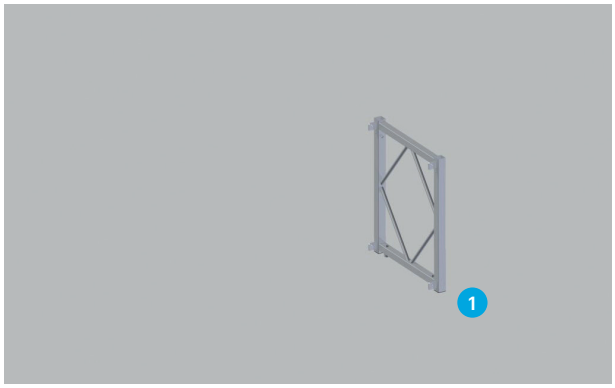

STEP 1
Place the base frame (SM-TRB-F-..) at your desired starting point. Frames are available in heights: 1000 – 1500mm (number 01) or 1600 – 2700mm (number 02).

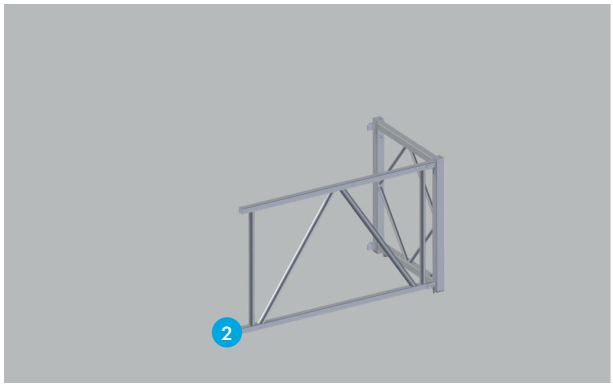

STEP 2
Connect the side frame (SM-TRB-F-B-..) to the base frame with the L-pins (SM-F-A-LP16). After positioning the parts can stand free, without toppling over. This facilitates easy assembly of the locking pin.

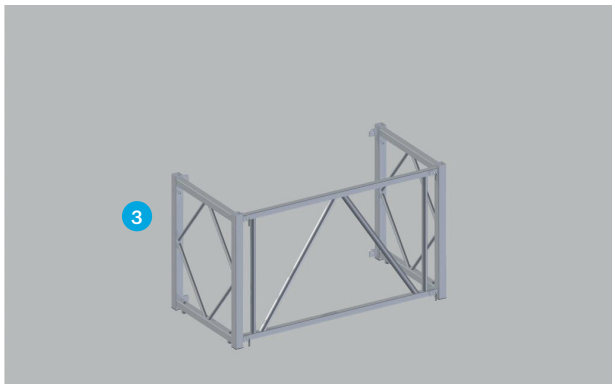

STEP 3
Connect the second base frame to the assembly, using the L-pins.

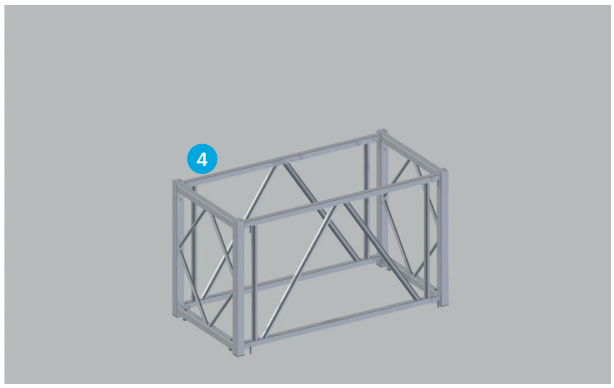

STEP 4
Connect the final side to the assembly, using the L-pins.

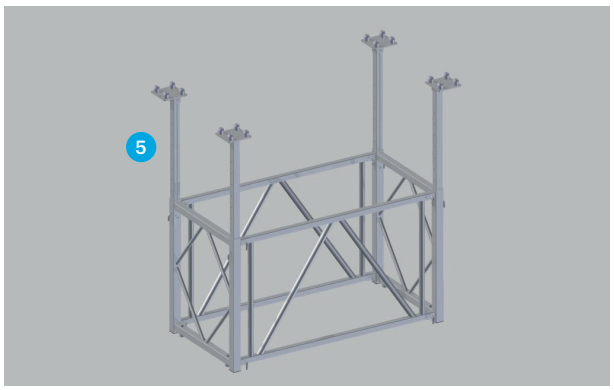

STEP 5
Insert the extendable legs (SM-TRB-ADJ-LEG-..) in the base frames. Adjust them for the correct height and then secure them with the L-pin.

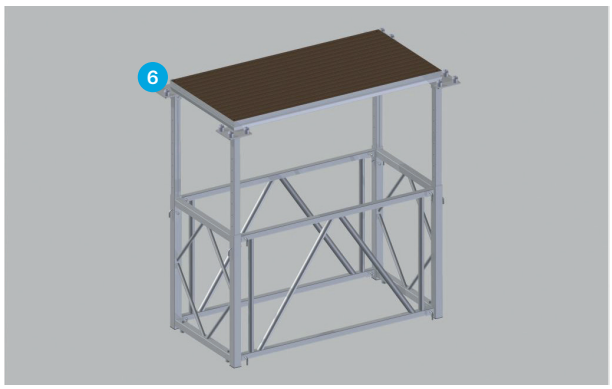

STEP 6
Place your decks on top of the deck adapters (SM-TRB-D-ADAP-..).

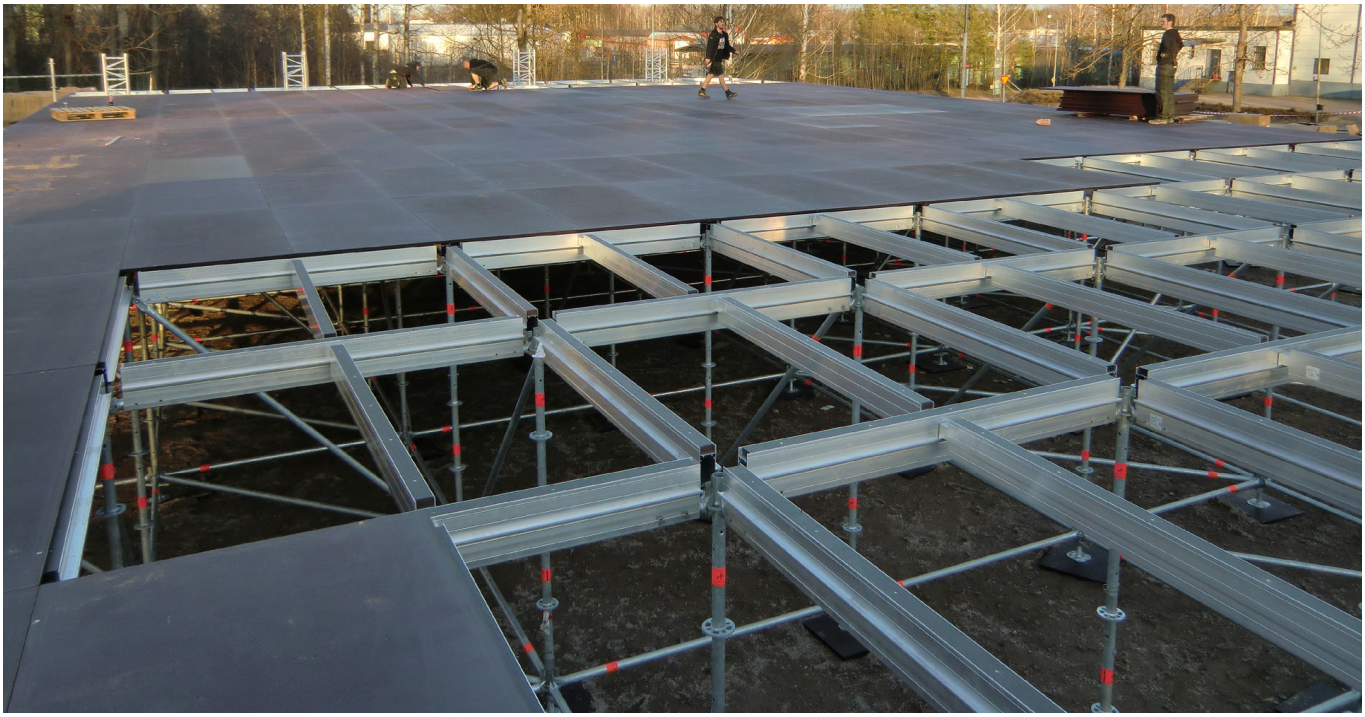

Photo: Prolyte Sales, Space Roof training Starlight

SYSTEM DESCRIPTION

Probeam offers an economical and innovative system that combines the benefits of both scaffolding and StageDex staging systems. The Probeam main beam has wedge head couplers on both ends that connect simply by sliding the wedge head over the rosette and inserting the wedge into the hole. The Probeam cross beam has extended support ridges to fit the Probeam main beam. The exceptional strength and high stability of the Probeam guarantees symmetrical and foolproof construction.

SIMPLE, FLEXIBLE, CONVERTIBLE

The Probeam is designed for two different applications:

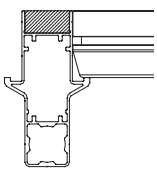

1 The Probeam converts the scaffolding system measurements (2072 mm) into the metric StageDex system, to create a floor on scaffolding size. The Probeam is fitted with a wooden inlay to overcome the 72 mm difference.

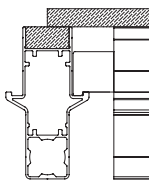

2 The Probeam system combined with a wooden inlay can be used as supporting frame when normal plywood is used as flooring system.

SYSTEM DETAILS

- Probeam main beam available in lengths of 1000 mm, 2000 mm and 1036 mm and 2072 mm.
- Probeam cross beam available in lengths of 1000 mm, 2000 mm and 1036 mm and 2072 mm.
- The main and cross beams can be ordered without wood, with basic line wood black or with a top line wooden inlay.
- Covers can be ordered in 3-way and 4-way version, with or without centre hole.

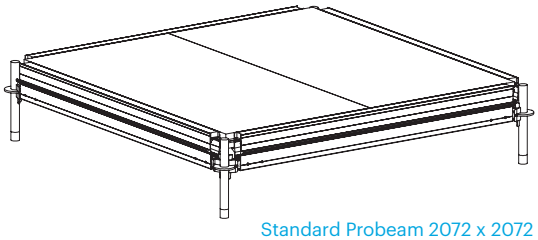

Standard Probeam 2072 x 2072

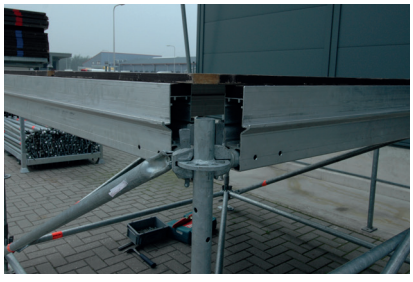

FLEXIBLE LAYHER ADAPTER

PRODUCT DESCRIPTION:

Being one of the major suppliers of temporary roof and staging systems, Prolyte products are often used in combination with Scaffolding systems. To facilitate the work of our users when building a stage, Prolyte has developed a system to integrate roof system towers and base sections in a Layher stage floor. By integrating and interconnecting these two systems you can create a safe and secure stage system.

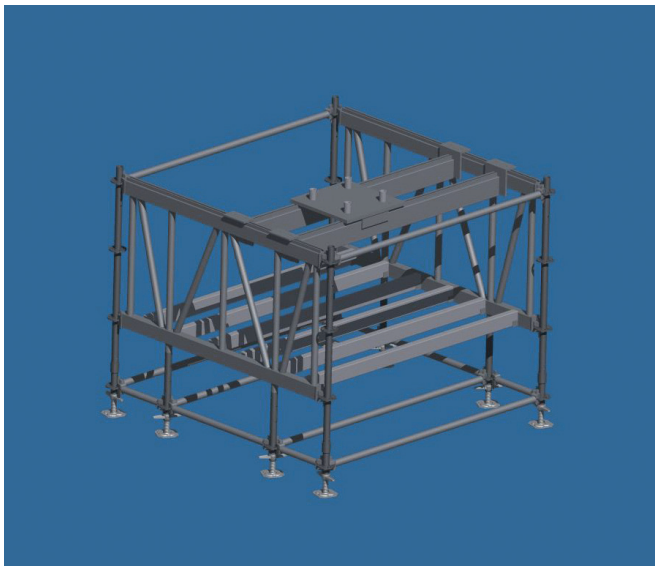

ADVANTAGES

- Significant ballast reduction; the self weight of the stage can be subtracted (when the stage is sufficiently braced)
- Lateral forces through guy-wiring or wind on the tower sections are absorbed by the substructure
- Clean and even building area for the roof system
- Towers are all built on the same height
- No need to invest in standard base sections
- 100% flexible in x/y direction

Prolyte has created a fully flexible and x/y axis adjustable base system, to take into account that the number of combinations between tower position, stage floor height and position compared to the side of the stage floor are endless.

The size and strength of the components derives from a maximum load structural analysis for the standard LT and ST roof systems. The beams are fitted with a special non-friction based sliding system to allow horizontal forces as well as vertical forces. The frames are utilised to hold cross beams to accommodate additional ballast. All steel frames are delivered with black powder coating.

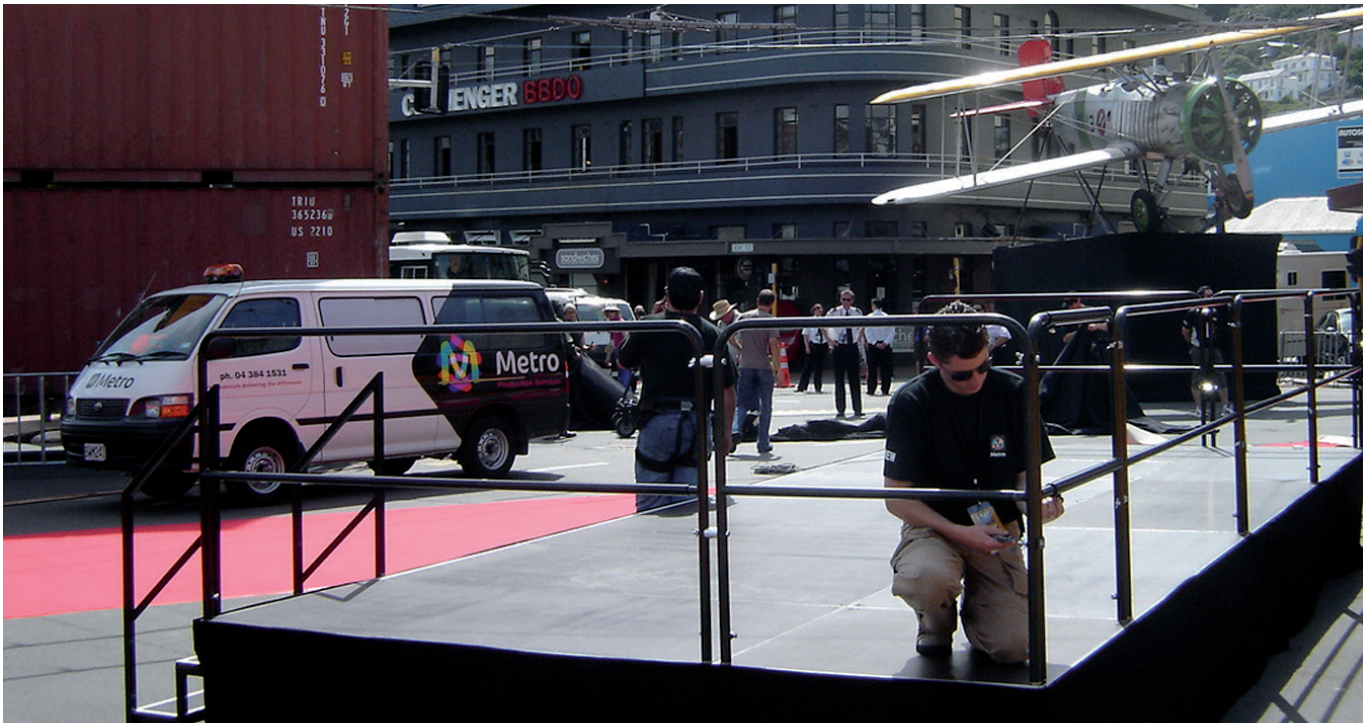

Photo: Metro Productions LTD New Zealand. Project: King Kong premiere in Wellington.

EASYRAIL

System Description:

Handrails and other accessories from the EasyRail range can easily be attached to the decks by inserting a spigot in a pre-bolted hole on each corner of the deck. This makes it possible to assemble the rails after the decks are built, as they are fully independent of the sides or the underlying constructions of the stage.

For the basic line decks, StageDex has developed special adapters for the spigots, which slide into the side profiles of the decks. The EasyRail comes in two different versions, both in compliance with the applicable standards (DIN 15921).

EasyRail mounted on top line deck.

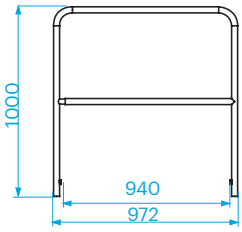

EasyRail railing. SM-RAIL-L100.

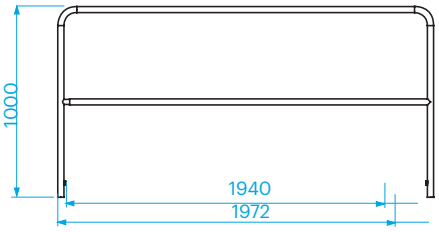

EasyRail railing. SM-RAIL-L200.

EasyRail mounted on basic line deck.

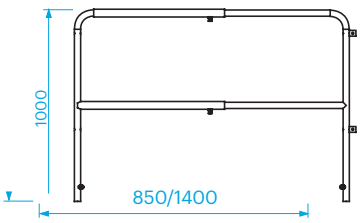

EasyRail railing. SM-RAIL-L85/140.

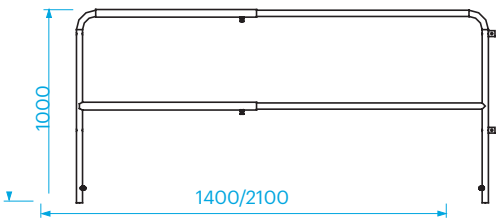

EasyRail railing. SM-RAIL-L140/210.

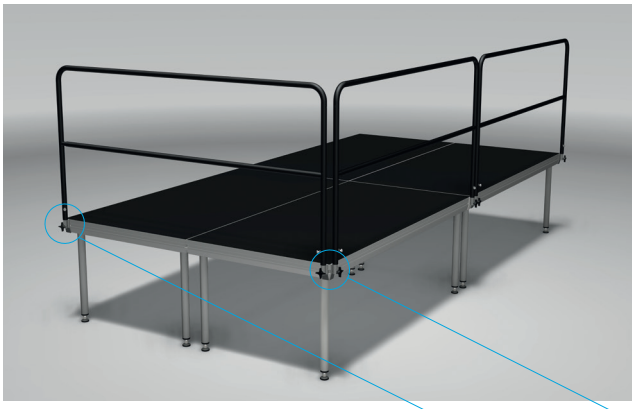

EASYRAIL 30 KG/M - BASIC LINE DECK

EASYRAIL 30 KG/M

The light-duty version of the EasyRail can resist a horizontal loading of 30 to 60 kg/m. This railing type can be used for stages or areas with no public access. This is the case for most commonly used stages. For top line decks, the railing can be easily mounted on top of the decks by simply bolting a 26 mm spigot to the pre-drilled hole. The railing is available in a fixed and an adjustable type.

FIXED RAIL

SM-RAIL-L100, length 1000 mm.
SM-RAIL-L200, length 2000 mm.

ADJUSTABLE RAIL

SM-RAIL-L85/140, adjustable from 850 to 1400 mm.
SM-RAIL-L140/210, adjustable from 1400 to 2100 mm.

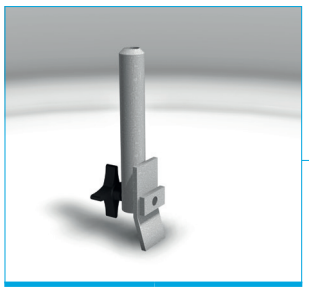

Description:	Code:
Spigot for handrailing	SM-RAIL-ATT-04

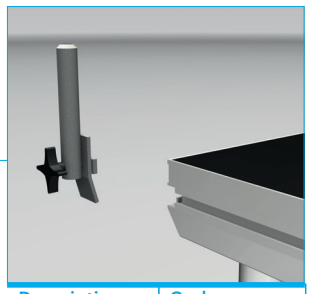

Description:	Code:
Spigot for handrailing	SM-RAIL-ATT-04

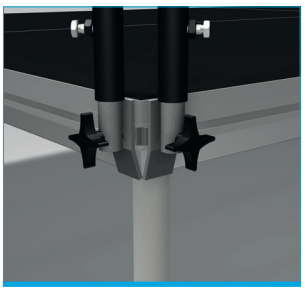

Description:	Code:
Spigot for handrailing	SM-RAIL-ATT-04

EASYRAIL 30 KG/M - TOP LINE DECK

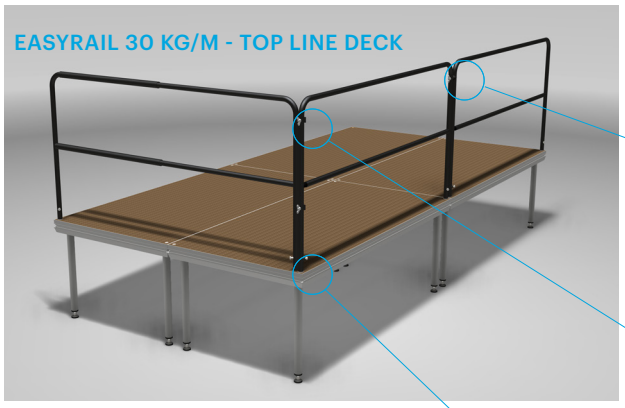

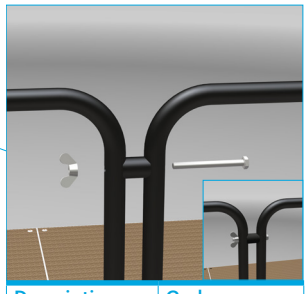

Description:	Code:
Railing connector	SM-RAIL-CON

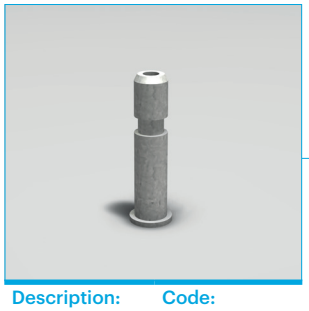

Description:	Code:
Spigot for handrailing	SM-RAIL-ATT-01

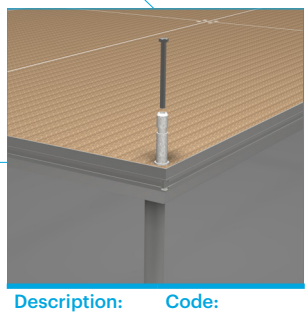

Description:	Code:
Spigot for handrailing	SM-RAIL-ATT-01
Bolt M12x150	BM-M12x150

Description:	Code:
Bolt M10x55	BM-M10x55
M-10 Wingnut	BM-M10WNUT
M-10 Springwash	BM-M10-SW

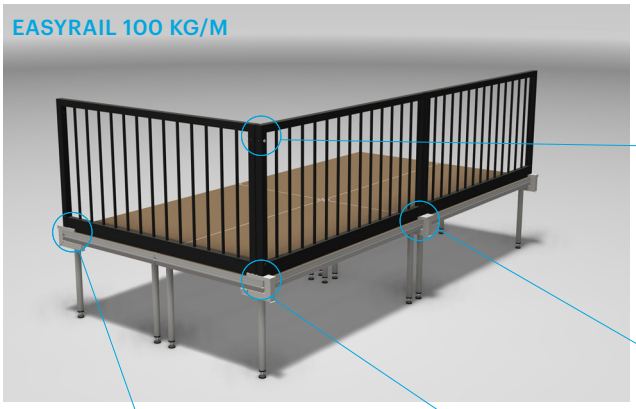

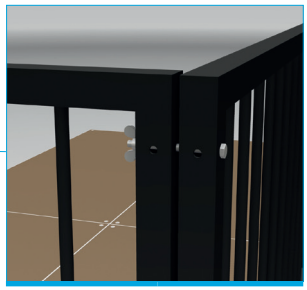

Description:	Code:
Bolts	BOLT M10X130
Nuts	M10 WINGNUT + WASHER

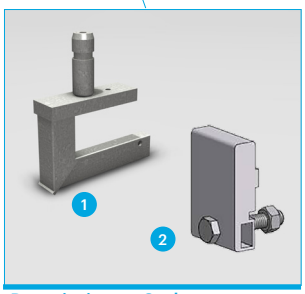

Description:	Code:
Spigot attachment	1 SM-RAIL-ATT-08
	2 SM-RAIL-ATT-08-01

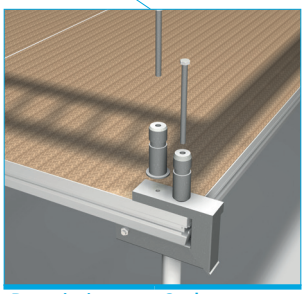

Description:	Code:
Spigot for handrailing	SM-RAIL-ATT-02
1x Bolt	BM-M12x140
1x Bolt	BM-M12x180

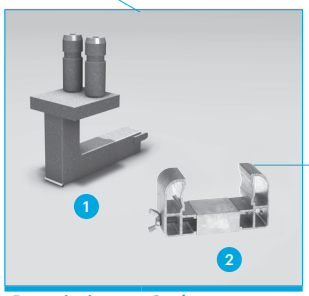

Description:	Code:
Spigot attachment	1 SM-RAIL-ATT-09
	2 SM-ACC-CLP-03

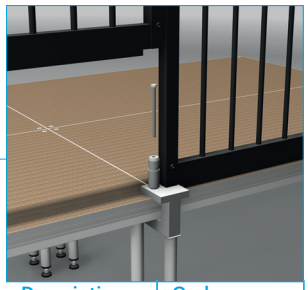

Description:	Code:
2x Bolt	BM-M12x180

EASYRAIL 100 KG/M

The heavy-duty version of EasyRail can resist a horizontal loading of 100 to 200 kg/m. This railing type can be used in all circumstances, including portions of the staging with public access, as the railing is in compliance with the applicable regulations. The railing can be easily mounted on top of the decks by simply bolting a 40 mm spigot to the pre-drilled hole, and then using the special railing adapter.
The railing adaptor has an extra M12 hole drilled in front of the spigot hole. An extra spigot can be bolted in place here to provide a connection for a corner rail. This type of rail can only be used in combination with top line decks.

RAILING LENGTHS

SM-RAIL-H-L100 RAILING 100 KG L = 100 CM
SM-RAIL-H-L200 RAILING 100 KG L = 200 CM

SM-RAIL-H110-L100 RAILING 100 KG H = 110 CM, L = 100 CM
SM-RAIL-H110-L200 RAILING 100 KG H = 110 CM, L = 200 CM

CORNER PIECES

SM-RAIL-H-L093C RAIL FOR CORNER 100 KG L = 93 CM
SM-RAIL-H-L193C RAIL FOR CORNER 100 KG L = 193 CM

SM-RAIL-H110-L093C RAIL FOR CORNER 100 KG, H = 110 CM, L = 93 CM
SM-RAIL-H110-L193C RAIL FOR CORNER 100 KG, H = 110 CM, L = 193 CM

ACCESSORIES

SM-RAIL-ATT-02 Spigot 40 mm for top line deck
SM-RAIL-ATT-03 Adaptor for 100 kg/m rail for top line deck

Photo: Musical Oorlogswinter, The Netherlands

ADJUSTABLE STAIR

System Description:

This unique, fully adjustable, staircase consists of separate units which can be combined to form a staircase between 1 m minimum and 3,2 m maximum height.
The units are based on four main beams of 60 × 6 mm tube to which the stair steps are connected. The stair steps are flexible and have a varying angle of 45 to 60 degrees. The adjustable stair is designed for a maximum loading of 500 kg/m2.

BASIC ELEMENTS

Top side:

SM-STAIR-500, basic element with 6 steps. The upper step aligns with the stage floor. This basic element is connected to the stage by means of a profile that is bolted to the stage with a T-head bolt (M10 x 40 mm) which is placed in the StageDex profile.

Bottom side:

The SM-STAIR-510 base section. Connects to the stair elements by means of a CCS7 coupler combined with the CCS7 hinge (CCS7-H-FM-90).

STEP UNITS

To elongate the basic element, extra step units can be mounted. Units range from 1 to 5 steps. Several units can be coupled to reach the maximum allowed height. The extra units are connected using the standard CCS7 coupling system.
SM-STAIR-501, 1 STEP BEAM.
SM-STAIR-502, 2 STEP BEAM.
SM-STAIR-503, 3 STEP BEAM.
SM-STAIR-504, 4 STEP BEAM.
SM-STAIR-505, 5 STEP BEAM.

HANDRAILS

Mounting the handrails completes the staircase. The railing can be combined by utilizing three parts:

- SM-STAIR-520 is the adjustable basic part, can be coupled, to cover the full height of your stair.
- SM-STAIR-521 is the rounded end part.
- SM-STAIR-522 is the rectangular end part to which another railing can be coupled.

The railing parts can be mounted only on the SM-STAIR-500 and the SM-STAIR-505. The railing is mounted to the main tube using the standard spigot (SM-RAIL-ATT-01), which is bolted to the tube using a M12 x 200 mm bolt.

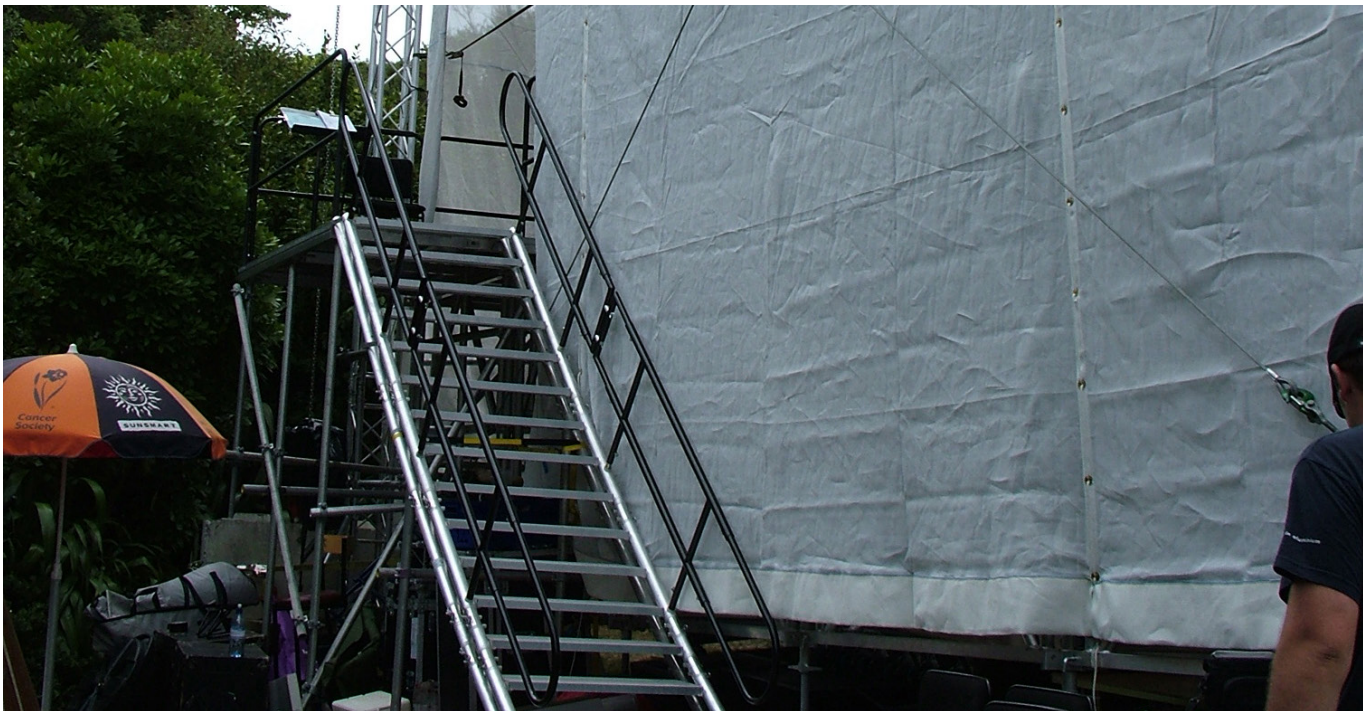

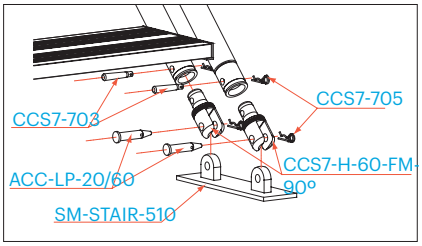

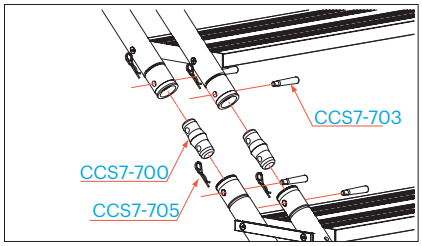

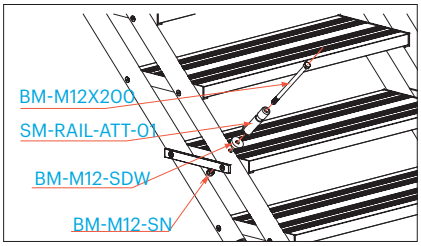

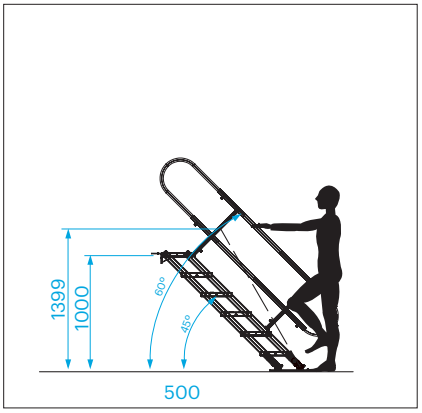

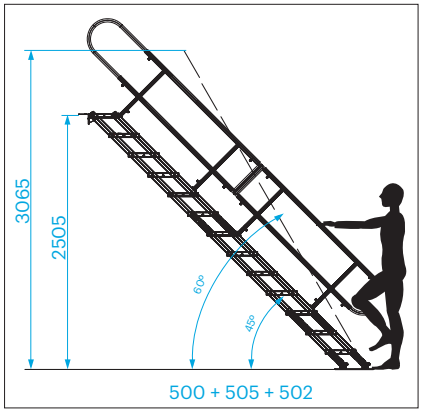

STAIR HEIGHTS USING DIFFERENT COMBINATIONS

All measurements in mm	500	500 + 501	500 + 502	500 + 503	500 + 504	500 + 505
A (stair angle 45 degree)	1000	1344	1537	1731	1924	2118
B (stair angle 60 degree)	1399	1636	1873	2110	2346	2584

All measurements in mm	500 + 505 + 501	500 + 505 + 502	500 + 505 + 503	500 + 505 + 504	500 + 505 + 505
A (stair angle 45 degree)	2311	2505	2699	2891	3075
B (stair angle 60 degree)	2829	3065	N/A	N/A	N/A

maximum allowable stair height 3,2 m.

Photos: Metro Productions LTD, New ZealandProject: King Kong Premiere, Wellington, New Zealand

MODULAR STAIR

System Description:

Separate stair units can be combined to create a stair of any desired height in steps of 20 cm by simply bolting stairs together. The units can be connected at both sides, which makes it possible to create a staircase of different widths as well as several heights.
The railing can be connected to the sides of the stairs, but also in between the steps, thereby creating the possibility to have a separate up and down staircase.

The measurements of the individual stair units are 910 × 225 mm. Each stair unit has an angular profile to one side, making it possible to fit the stairs directly to the decks to create an even level for the last stair. The stair unit can be mounted using the T-bolts.
The SM-STAIR-CON-01 special clamp is available to mount stair units to the legs.

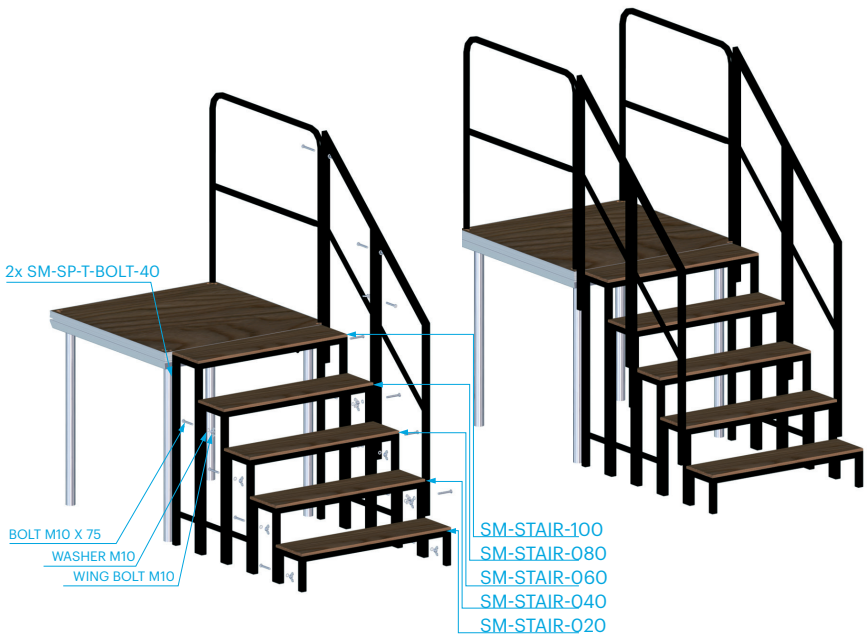

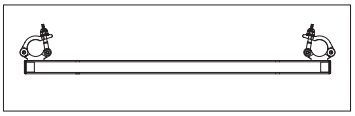

100 cm	SM-STAIR-CON-01
200 cm	SM-STAIR-CON-02

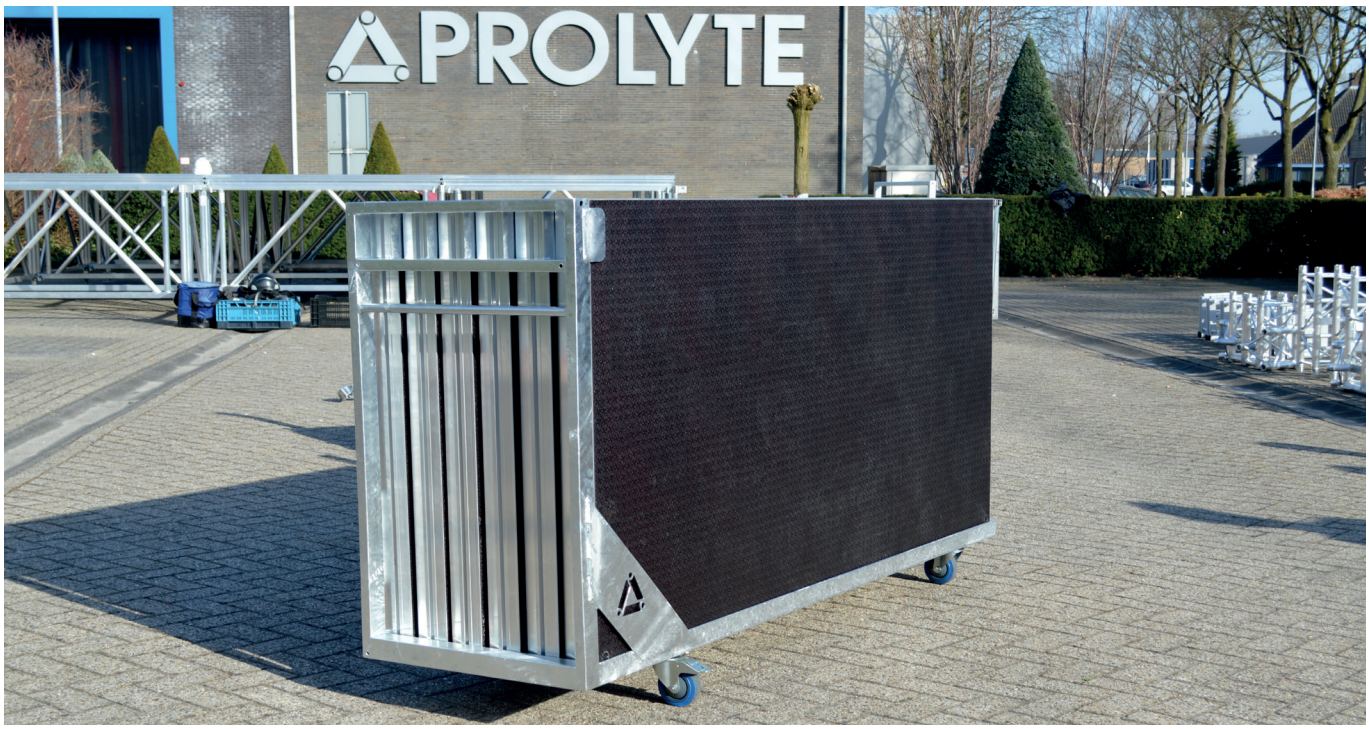

Photo: Prolyte Group

STAGEDEX DOLLY

As an extension of its StageDex product range, Prolyte has added two dollies that are tailored to market requirements.

BUILT TO LAST

The sturdy flatbed dolly has been developed to transport 20 decks, simply stacked on top of one another. This flatbed dolly is ideal for use in larger venues and for large-scale rental.

- Galvanised steel frame
- Design allows nesting for empty storage or transport
- Easy to manoeuvre due to extra-large wheels
- Fitted with 2 swivels and 2 fixed castors for easy steering
- Integrated handles

PRODUCT SPECIFICATIONS: SM-ACC-DOLLY-01	
Dimensions	L2080 x W1020 x H1276 mm
Weight (empty):	92,8 kg
Weight (loaded):	773 kg
Capacity:	20 pcs StageDex 2x1

SLIM FIT

The more compact and manageable 6-deck dolly is designed for use in smaller venues, theatres and hotels. Due to the upright position of the decks, this dolly is small enough to fit through any door.

- Galvanised steel frame
- Design allows nesting or tipping for empty storage or transport
- Fitted with 2 swivels and 2 fixed castors for easy steering
- Narrow width – at 60 cm it fits through doors and is based on standard truck dimensions
- Pre-fabricated slots to stack the decks on the dolly
- Integrated handles

PRODUCT SPECIFICATIONS: SM-ACC-DOLLY-02	
Dimensions	L2075 x W600 x H1191 mm
Weight (empty):	60,4 kg
Weight (loaded):	265 kg
Capacity:	6 pcs StageDex 2x1

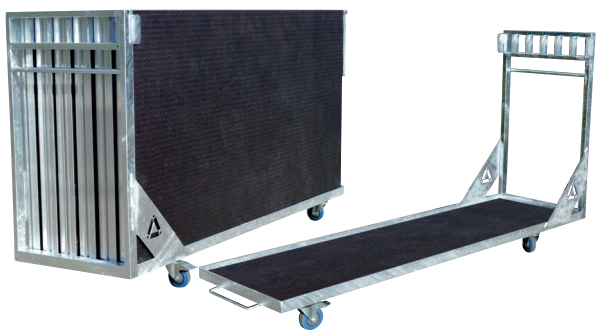

STAGEDEX LEVELLER SM-ACC-CON-01

Use the StageDex leveller to achieve precise levelling of your stage system and to prevent any vertical movement between the decks. Simply slide the cube into the side profile of the decks. Once the adjoined deck is placed, the StageDex leveller keeps both decks at precisely the same height. A safe and even stage floor, free from tripping hazards, is the result. The levellers can be delivered in several lengths on request.

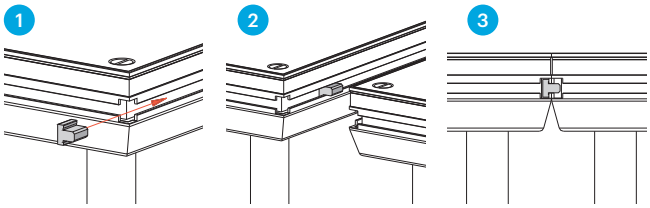

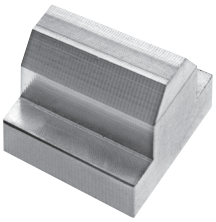

STAGEDEX CONNECTOR SM-ACC-CON-02

The StageDex Connector not only keeps your stage floor exactly level, but connects the decks as well. The deck connector slides into the side of the profile and is fixed with the aid of a simple hex key; it can be used in combination with the StageDex Leveller. The StageDex Connector is specially designed for circumstances where the leg-to-leg clamp cannot be mounted, including:

- Low stages. There are no legs or the legs are too short to be able to mount the clamp.
- Angular or curved stages. The centre-to-centre distance of the legs at the angular corners of the stage is too large to mount the clamp.

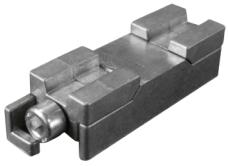

COUPLING PROFILE

The coupling profile provides an easy method of coupling your StageDex system while still allowing elements of the staging to be raked at a certain angle. This offers the ideal solution for building ramps, sloping walkways or passageways for wheelchairs. The profile slides into the side of the decks; the adjoining deck is safely attached. The maximum raking angle is 30 degrees.

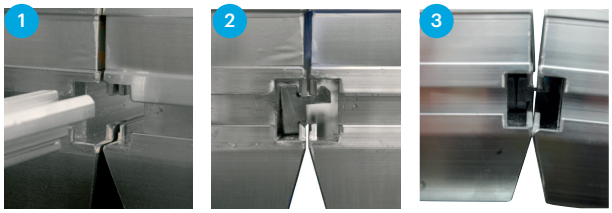

COUPLING PROFILE	
SM-ACC-CON-03	15 cm
SM-ACC-CON-04	35 cm
SM-ACC-CON-05	85 cm
SM-ACC-CON-06	135 cm
SM-ACC-CON-07	185 cm
SM-ACC-CON-08	600 cm

STAGEDEX LEG BRACKET SM-ACC-CON-09

Steel bracket for positioning the stage and keeping legs in place. For tiered seating or multi level stages.

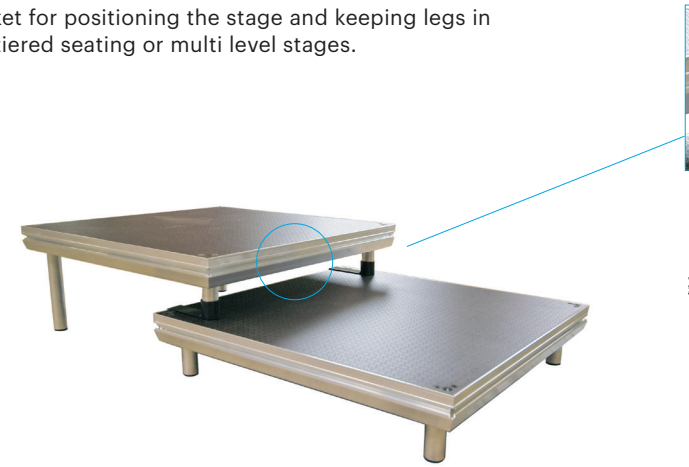

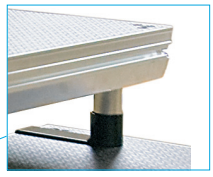

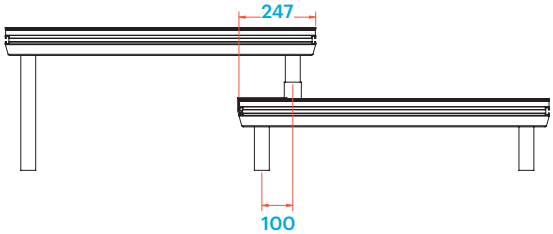

LEG-TO-LEG CLAMP SM-ACC-CLP-01/02

As well as the SM-ACC-CLP-01, the leg-to-leg clamp that connects two legs, Prolyte has designed the SM-ACC-CLP-02 that connects four legs. Both clamps are easily mounted; tools are not required. The clamps absorb the horizontal forces on the stage floor and guarantee a close fit of the decks.

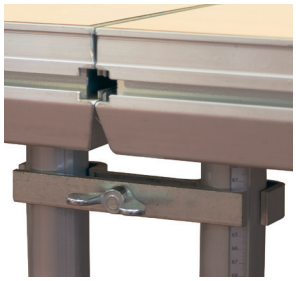

DEX-TO-DEX CLAMP SM-ACC-CLP-03

After your decks are mounted to the legs or support structure, they can be connected to each other using this clamp to ensure a sturdy connection between the decks. Using the clamp will prevent any unwanted vertical movement of your stage floor and will absorb the horizontal loading applied to the decks.

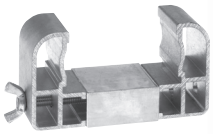

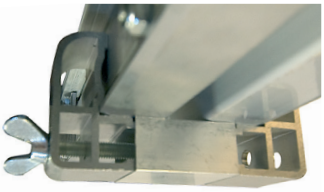

CLICK-ON STAGEDEX PROFILES SM-CT-ATT

One simple click and the profile is mounted to your deck! There are two click-on systems available: skirting profile (SM-CT-ATT-(06 t/m 09)) and toe board profile (SM-CT-ATT-(11 t/m 13)). Each profile works with a simple click and lock system and requires no tools to secure into place. These timesaving products can be locked on from the top for quick and easy assembly.

The skirting profile is developed to create an easy way to attach skirting to your decks, finishing the look of your platform or stage neatly. This profile is available in lengths of 470 mm, 970 mm and 1970 mm.

A Velcro strip is delivered with this profile to facilitate the attachment of skirting. The skirting profile is developed to create an easy way to mount a toe board to your platform or staging area, creating a safe zone and preventing chairs from skidding off. This profile is available in lengths of 470 mm, 970 mm and 1970 mm.

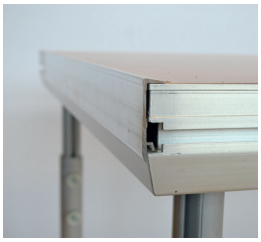

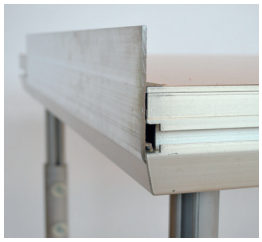

T-HEAD BOLT SM-SP-T-BOLT-40

The T-head bolt can be placed in the side profile of the deck. It can be used to attach anything that requires bolting in place, from panels and signs to set pieces or special accessories. The bolts are available in several lengths.

Photo: Events/Cristi Mitrea. Project: Standard Vision, Linkin Park concert Romania

System characteristics

The StageDex Barrier is a lightweight crowd control system made of aluminium. The Barrier has a self-weight of only 35 kg per 1 m section.

The smooth round top bar and the bottom bar incorporate a stainless steel 15 mm slot pin that provides easy connection points for the Barriers. The bottom side can be secured using a hexagon socket head screw (M 12 × 180 mm). All profiles have soft, rounded edges for maximum comfort. The design load of the barrier is 4,5 kN/m1. The Barrier folds flat after use and can be stacked in dollies for easy transportation and storage. Apart from the standard 1 m sections, the Barrier can be delivered featuring several corner types, with extended platform sections, and in a SnakeGate version. Furthermore, StageDex can deliver the Barrier featuring your own logo upon request.

System applications

The StageDex Barrier was developed for use as a safety device to control crowds in various types of occasions ranging from pop concerts to outdoor events. The Barrier offers a combination of optimum safety and comfort for the audience as well as a safe working area for rescue personnel. The StageDex Barrier is designed as a demountable structure; setup and assembly are quick and easy, requiring a minimum amount of tooling.

Crowd safety

The StageDex Barrier was designed in accordance with strict design criteria and complies with all health and safety regulations such as; “Temporary Demountable Structures”, “Technical Standards for Places of Entertainment”, DIN 4113 and BS 8118.

Photo: SGS Security

Technical Specifications: Barrier A	
Storage volume	1070 x 1242 x 90 mm
Self weight alu barrier	35 kg/piece 1m
Design load	4,5 kN/m1
Complies with demountable structures	EN 13200 & temporary

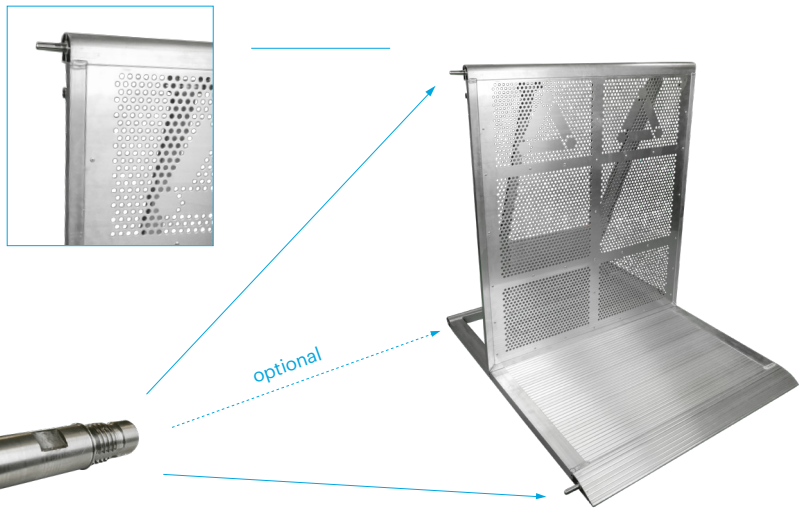

BAR-30-006 Barrier coupler

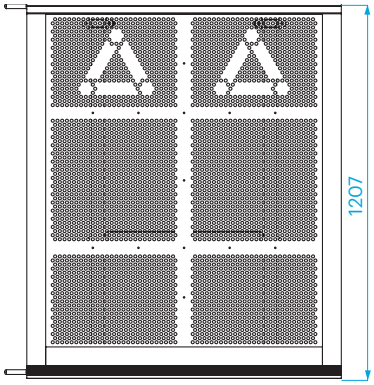

BAR-30-100
Barrier Front view

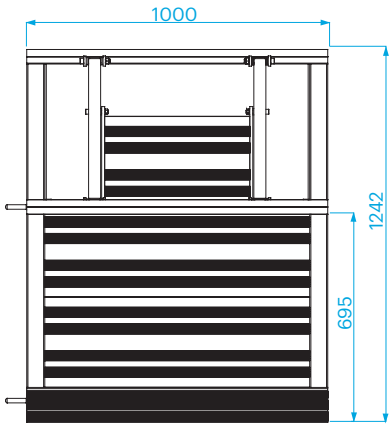

BAR-30-100
Barrier Top view

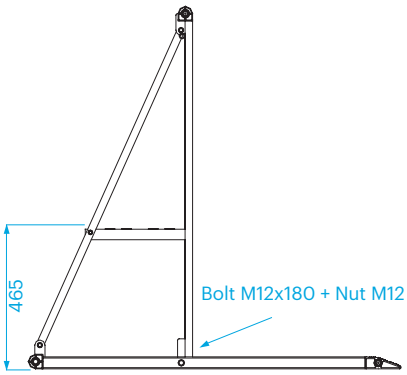

BAR-30-100
Barrier Side view

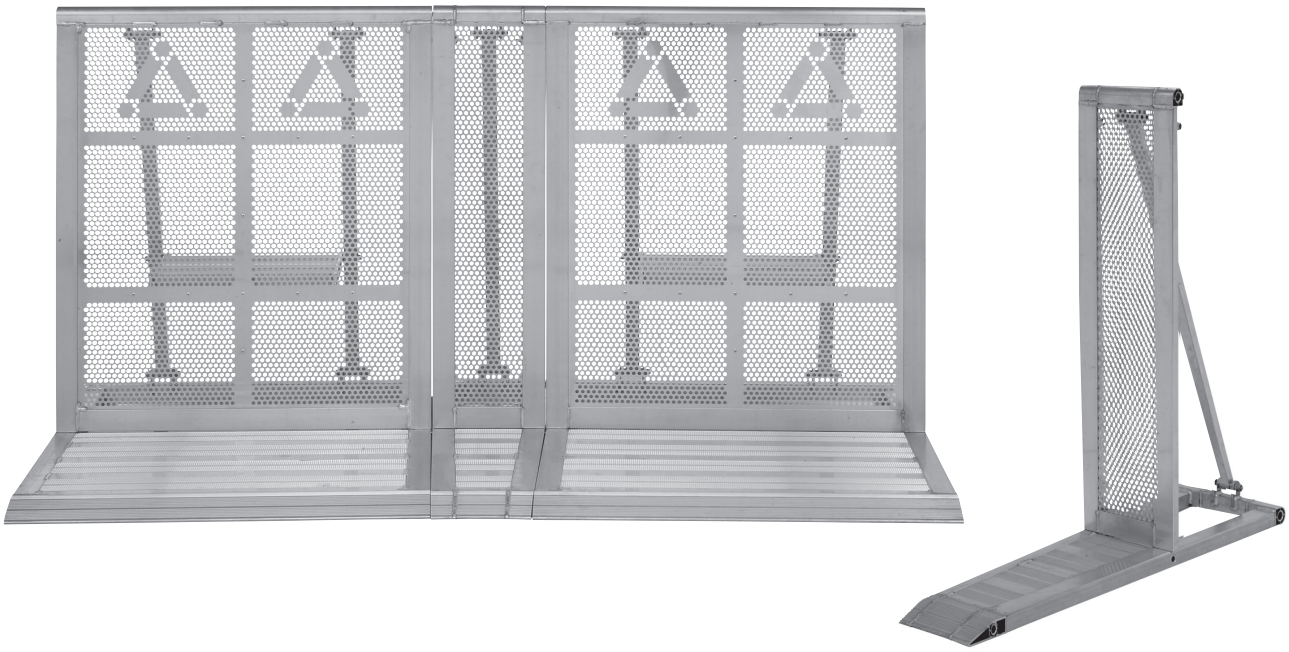

INSIDE	
BAR-31-105	5º
BAR-31-122,5	22,5º
BAR-31-145	45º

OUTSIDE	
BAR-31-205	5º
BAR-31-222,5	22,5º
BAR-31-245	45º

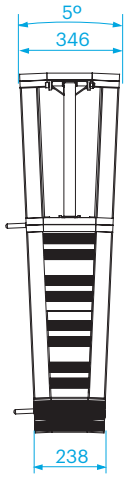

BAR-31-105
Inside view

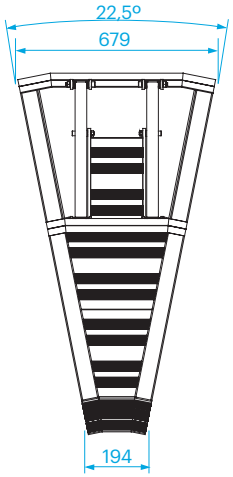

BAR-31-122,5
Inside view

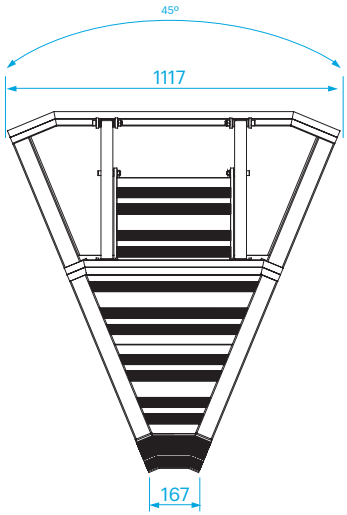

BAR-31-145
Inside view

FLEX CORNER

The StageDex Barrier range is extended by the flex corner. In terms of angle, this corner can vary from 90-270 degrees and fits seamlessly with the standard StageDex Barrier. The flex corner is equipped with a robust heavy duty hinge, which is capable of absorbing all the forces to which the barrier may be subjected.

The flex corner can be used as an inside as well as an outside corner. StageDex has designed two inlay plates for a 90 degree and a 135 degree setup, respectively. Other inlay plates can be manufactured on request. The flex corner can be used without the inlay plate.

BAR-31-001

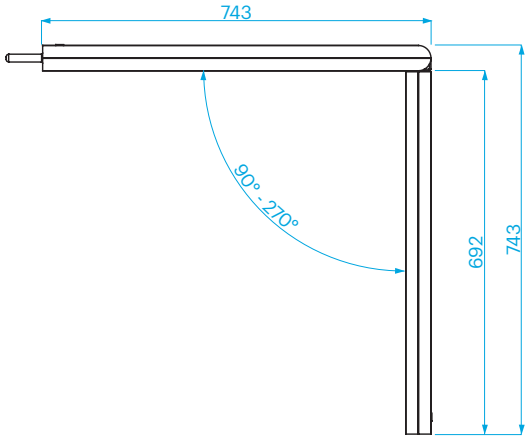

BAR-31-001

Top view

BAR-31-002

BAR-31-003

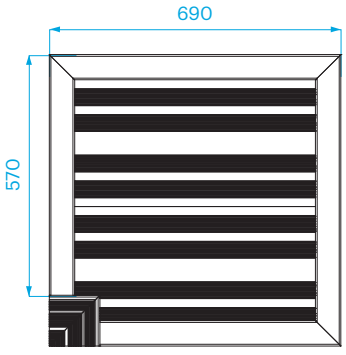

BAR-31-002

Inside view

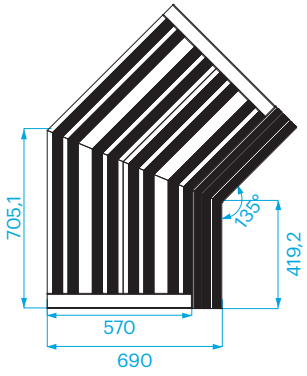

BAR-31-003

Inside view

BAR-32-003

BAR-32-004

SNAKE GATE

The StageDex SnakeGate is a specially designed barrier to accommodate
the transit of your cables (“snake”) from the stage to front of house (FOH).

The special designed gate leaves enough room in width and height for any type of standard cable ramp to pass through the barrier line.
The integrated door facilitates access from the stage to FOH for working technicians or security personnel.

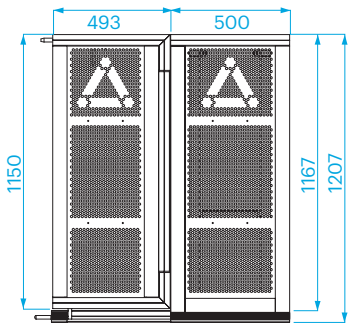

BAR-32-003

Front view

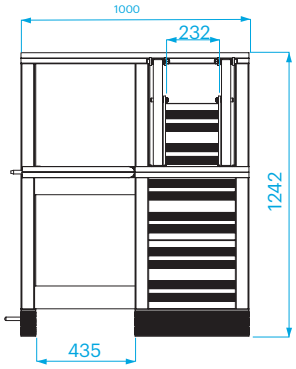

BAR-32-003

Top view

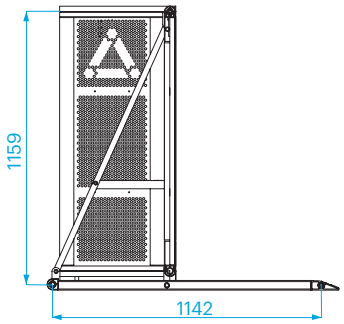

BAR-32-003

Side view

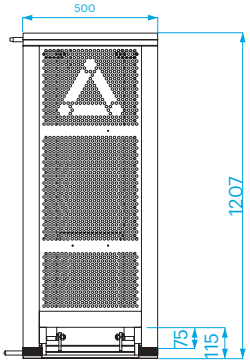

BAR-32-004

Front view

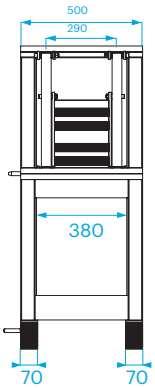

BAR-32-004

Top view

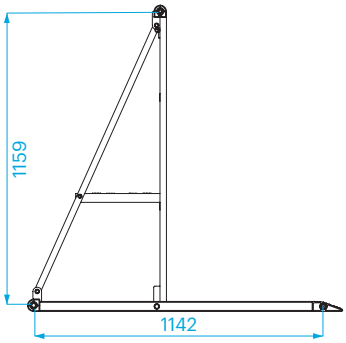

Side view

Photo: Project by MF Group, LineUpGates for Red Hot Chilli Peppers concert, Moscow, Russia.

SAFE CROWD CONTROL

Over the years, Prolyte has developed a full range of aluminium crowd control barriers that live up to the highest levels of safety and user-friendliness while complying with the strictest regulations. Prolyte barriers are easy to work with and offer crowd control in a friendly and safe way.
This broad line of barriers is extended with the LineUpGate. Together with the standard barriers, a programme of fixed and variable corners, the mega gate and several clever options, the Prolyte barriers now offer a complete solution for crowd control set-ups.

MANAGING QUEUING CROWDS SAFELY

Line-up gates are designed as check points for ticket collection and to manage queuing crowds. The Prolyte LineUpGate offers a simple and efficient tool to control your audience inflow at events or festivals. The modular system can be extended with as many entry gates as you need and can be connected to the standard barriers, creating one interconnected and safe system. The LineUpGates are designed to remain upright under substantial pressure.

The entry gate is 60 cm wide and offers controlled audience entry, passing one person at a time through the gate. If the situation requires, the gates can be closed with one simple handle, stopping the inflow of audience in a controlled way. The LineUpGates can be branded with signs or banners displaying your event logos by standard mounting options.

LINEUPGATE, A CRAFTY SOLUTION

- The Standard version LineUpGate has two entries; each entry is 60 cm wide, total depth is 230 cm. Minimum overall width (1 gate) is 120 cm.
- Bumpers available in 90° and 180° sections.
- Can be coupled to any barriers from the Prolyte Barrier range
- Modular system, more LineUpGates can be coupled to create multiple entries
- Each entry can be closed with a hinged gate to stop the inflow of audience when required
- Standard mounting options for banners or signs
- Standard supplied with floor panel to secure safe and stable set-up
- All profiles have rounded edges – for more comfort and easy handling
- Panel holes are no larger than 10mm, to prevent jammed fingers
- Noise reduction; all barriers have a vibration free mounted front panel and nylon bearing at hinge points
- Floor panels have standard ridges to create more grip on uneven surfaces, like sand or grass
- Compact transportation – folds to pallet size

DOLLY

SPECIFICATIONS:			
Size	60 cm wide, total depth is 230 cm. Minimum overall width (1 gate) is 120 cm		
Weight	1	Bar-34-001	30 kg
	2	Bar-34-002	20 kg
	3	Bar-34-003	16 kg
	4	Bar-34-004-R	6,5 kg
	5	Bar-34-004-L	6,5 kg
	6	Bar-34-005	3 kg
	7	Bar-30-100	35 kg

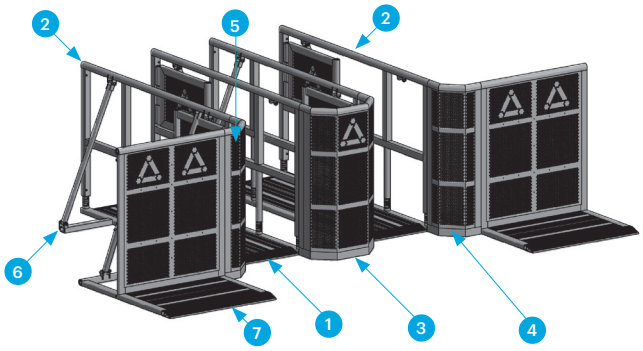

DOLLY

The specially designed barrier dolly makes transporting the barriers easy. This robust steel dolly holds 10 standard 1 m barrier sections. Simply load the StageDex Barriers on top of each other in the dolly. A set of 4 sturdy castor wheels makes transportation and the loading of the dolly easy. The dollies can be stacked on top of each other to save space in storage.

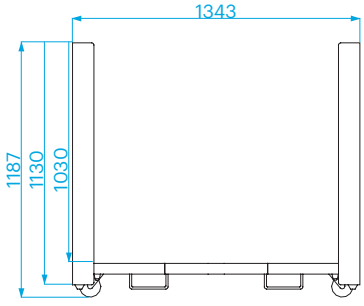

BAR-10-010 / 011
Front view

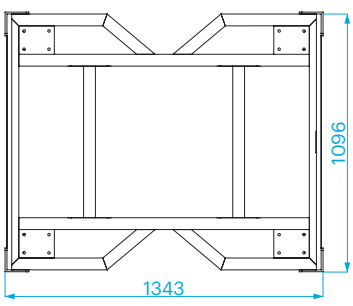

BAR-10-010 / 011
Top view

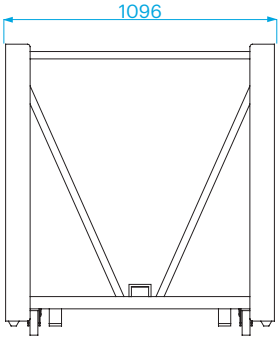

BAR-10-010 / 011
Side view

BAR-10-010 are without wheels
BAR-10-011 are with wheels

Photo: Prolyte

Content of Hoist Products

NERO CHAIN HOISTS 230

ACCESSORIES 236

MANUAL CHAIN HOIST 240

DATABASE 241

Photo: Perinic Sistemi D.O.O, Voice of Croatia

PROLYTE
Feel. Fantastic.

Prolyft products

Lifting, drive and control solutions from Prolyte makes productions happen, on stage, on tour, in theatres or sports arenas. They ensure safe object or performer movements and protect performers in their daily work. Whether up, down, left or right, the direction, speed or load of the movement is only limited by your imagination. Prolyft is able to cover a broad spectrum of lifting, drive and control solutions within the entertainment market due to employees with an open ear for customer demands and the ability to translate ideas into standard or customized solutions.

Get Ready for the Next Level

When Simplicity in Motion is the ultimate goal, there is always a next level to meet. Prolyte invites you to take that level further with a product range that is fit to meet the future.

Made for entertainment

Prolyft Nero hoists are designed to meet the increasingly exacting demands of the entertainment market. These foolproof hoists are designed to withstand rigorous transportation and rough handling, and can be serviced just about anywhere – even if it is 12 metres above the stage!

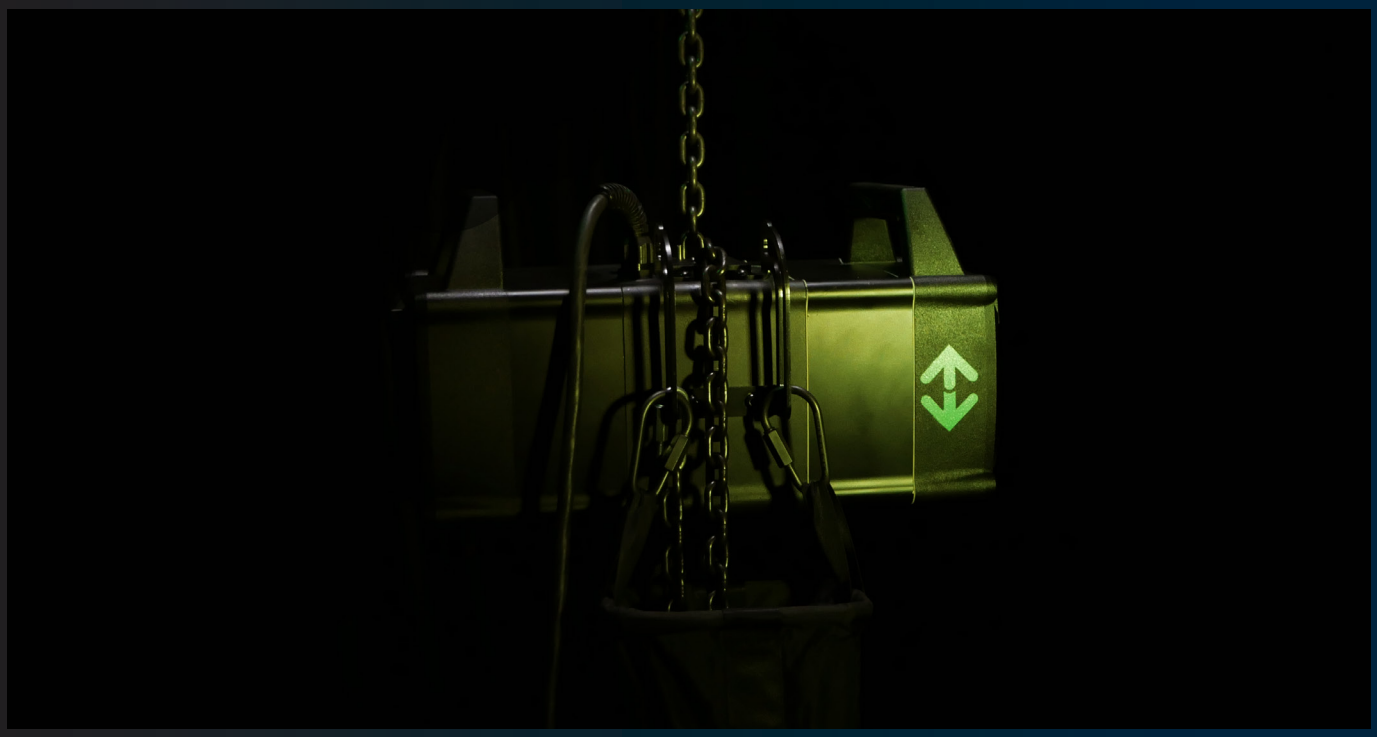

Photo: Prolyte

The controllers are designed in accordance with the latest standards, using a user-friendly layout, reducing the risk of operator failures, in either simple or complex lifting situations.

The Unique Prolyft Program

Prolyte sustains a unique service program on its complete hoist range, developed to offer maximum service and support for all hoist owners.

This program encompasses:

- Installed network of trained and certified Service Points.
- Lifetime warranty.
- Individual identification - RFID tag on every hoist for easy, web-enabled, track and trace functions.
- Prolyft Service database – automatic reminders for re-certification.
- Test certificates worldwide online available for owners of every hoist.

Photo: Prolyte.

THE PROLYFT NERO

The Prolyft range is standard with a black chain. Standard on the low voltage and the direct control is the unique outside limit switch which it makes it very easy for the riggers to set limits on their rig positions. The RFID-tag which is on the hoist is the link to the database where the complete log of the specific hoist is saved.

COMPETENCES:

- Unique database, registry & service software suite.
- Lifetime warranty.
- Quality manufacturing in the EU.
- Certified products, comply to latest world standards.
- Complete assortment with all accessories available.
- Local availability.
- Worldwide network of Service Points.

FEATURES

- Standard with a black chain for the complete range.

- Outside limit switch on low voltage and direct control.

- Soft stopper, easy to postion on a random place on the chain.

- Fixed bracket allowing chainbag to move position related to use the motor-up or motor down.

- The RFID-tag which is on the hoist, is the link to the unique and completely upgraded database.

- Database with all the certificates and complete history of the hoist.

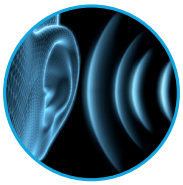

- Low noise level: 67.5 dB at full load.

- Damage reducing housing design, with hand grips integrated in cover trough and through coloured plastic covers.

Photo: Prolyte.

Technical specifications

Load capacity	250 kg
Model	D8+
Type of Control	Direct of Low Voltage
FEM Class	2m
Duty Factor	40%
Start per Hour	240
Breaking time / 10 years	6300 h
Falls of Chain	1
Type of Chain	DIN EN 818-7 - type DAT - Zinc galvanized steel 80 grade
Size of Chain	5x15 mm
Chain Self-Weight	0.53 kg/m
Safety Factor	8.1
IP Rate	55
Insulation Class (Temperature Class)	F in according to CEI 15-26
Load Wheel	5 pockets
Noise Level	67.5 dB @ full load
Connection Cable Length	(75 ± 5) cm
WLL	250 kg
Frequency	50 Hz
Motor power	0.5 kW
Number of brakes	2
Brake size	06
Self-weight	21 kg
Lifting speed	4m/min

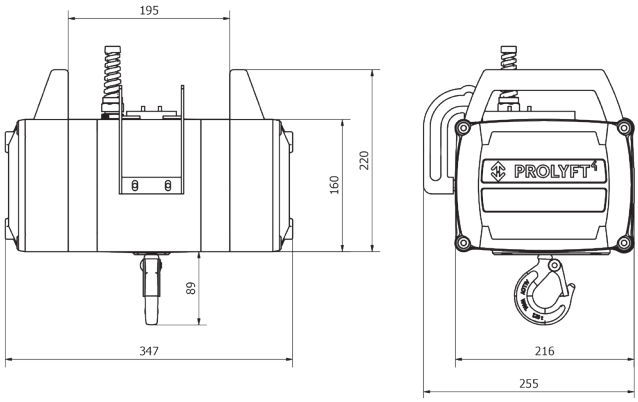

Photo: Prolyte.

Technical specifications

Load capacity	500 kg
Model	D8+
Type of Control	Direct of Low Voltage
FEM Class	2m
Duty Factor	40%
Start per Hour	240
Breaking time / 10 years	6300 h
Falls of Chain	1
Type of Chain	DIN EN 818-7 - type DAT - Zinc galvanized steel 80 grade
Size of Chain	6x18 mm
Chain Self-Weight	0.78 kg/m
Safety Factor	8.1
IP Rate	55
Insulation Class (Temperature Class)	F in according to CEI 15-26
Load Wheel	5 pockets
Noise Level	67.5 dB @ full load
Connection Cable Length	(75 ± 5) cm
WLL	500 kg
Frequency	50 Hz
Motor power	0.8 kW
Number of brakes	2
Brake size	06
Self-weight	24 kg
Lifting speed	4m/min

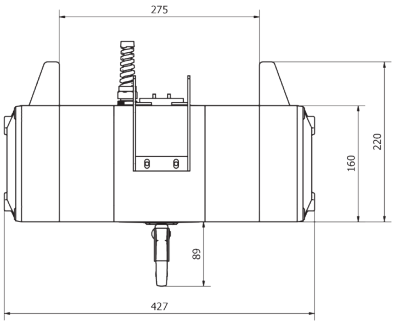

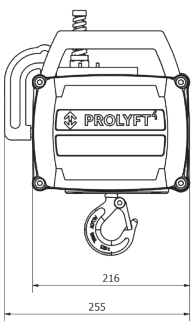

Photo: Prolyte.

Technical specifications

Load capacity	1000 kg
Model	D8+
Type of Control	Direct of Low Voltage
FEM Class	2m
Duty Factor	40%
Start per Hour	240
Breaking time / 10 years	6300 h
Falls of Chain	1
Type of Chain	DIN EN 818-7 - type DAT - Zinc galvanized steel 80 grade
Size of Chain	8x24 mm
Chain Self-Weight	1.39 kg/m
Safety Factor	8.1
IP Rate	55
Insulation Class (Temperature Class)	F in according to CEI 15-26
Load Wheel	5 pockets
Noise Level	67.5 dB @ full load
Connection Cable Length	(75 ± 5) cm
WLL	1000 kg
Frequency	50 Hz
Motor power	1 kW
Number of brakes	2
Brake size	08
Self-weight	43 kg
Lifting speed	4m/min

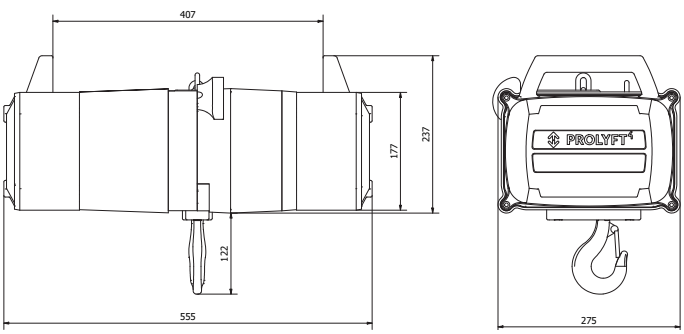

Photo: Prolyte.

Technical specifications

Load capacity	2000 kg
Model	D8+
Type of Control	Direct of Low Voltage
FEM Class	2m
Duty Factor	40%
Start per Hour	240
Breaking time / 10 years	6300 h
Falls of Chain	2
Type of Chain	DIN EN 818-7 - type DAT - Zinc galvanized steel 80 grade
Size of Chain	8x24 mm
Chain Self-Weight	1.39 kg/m
Safety Factor	8.1
IP Rate	55
Insulation Class (Temperature Class)	F in according to CEI 15-26
Load Wheel	5 pockets
Noise Level	67.5 dB @ full load
Connection Cable Length	(75 ± 5) cm
WLL	2000 kg
Frequency	50 Hz
Motor power	1.6 kW
Number of brakes	2
Brake size	10
Self-weight	45 kg
Lifting speed	4m/min

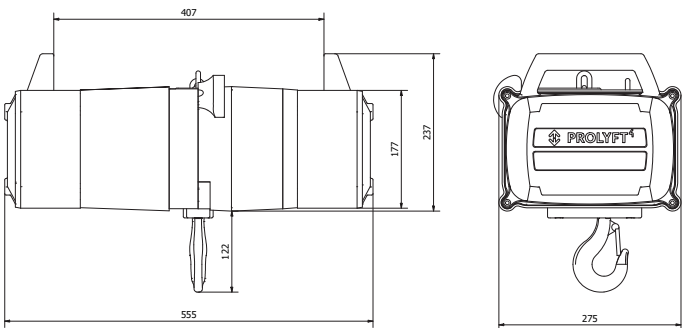

PROLYFT CONTROLLERS

Prolyft controllers have been engineered with an understanding of the needs of rigging operator. The front panel layout and the functionality of the buttons have been carefully designed to meet the demands of daily practice in lifting, where any mistake can create an overload situation.

PROLYFT BASIC CONTROLLERS

Prolyft basic controllers are designed for applications that do not require advanced technology, offering a safe, simple, robust and effective control situation.

Available models:

- 8 and 12 channel version
- Direct Control and Low Voltage Control version.
- 400V and 230V.

SPECIFICATIONS:

- Robust rotating up/down selection switches per channel.
- Main circuit breaker per 4-channels.
- E-stop at SIL2 level.
- 32Amp/400V CEE form 5pin mains connector.
- Harting 16pin output connector(s).
- 19-inch rack mountable housing.

Technical specifications

Article codes:	
PLB-C8DC-01	PROLYFT CONTROLLER 8 WAY BASIC 400-3 DC
PLB-C8DC-02	PROLYFT CONTROLLER 8 WAY BASIC 230-3 DC
PLB-C8LV-01	PROLYFT CONTROLLER 8 WAY BASIC 400-3 LV
PLB-C8LV-02	PROLYFT CONTROLLER 8 WAY BASIC 230-3 LV
PLB-C12DC-01	PROLYFT CONTROLLER 12 WAY BASIC 400-3 DC
PLB-C12DC-02	PROLYFT CONTROLLER 12 WAY BASIC 230-3 DC
PLB-C12LV-01	PROLYFT CONTROLLER 12 WAY BASIC 400-3 LV
PLB-C12LV-02	PROLYFT CONTROLLER 12 WAY BASIC 230-3 LV

CONTROLLERS

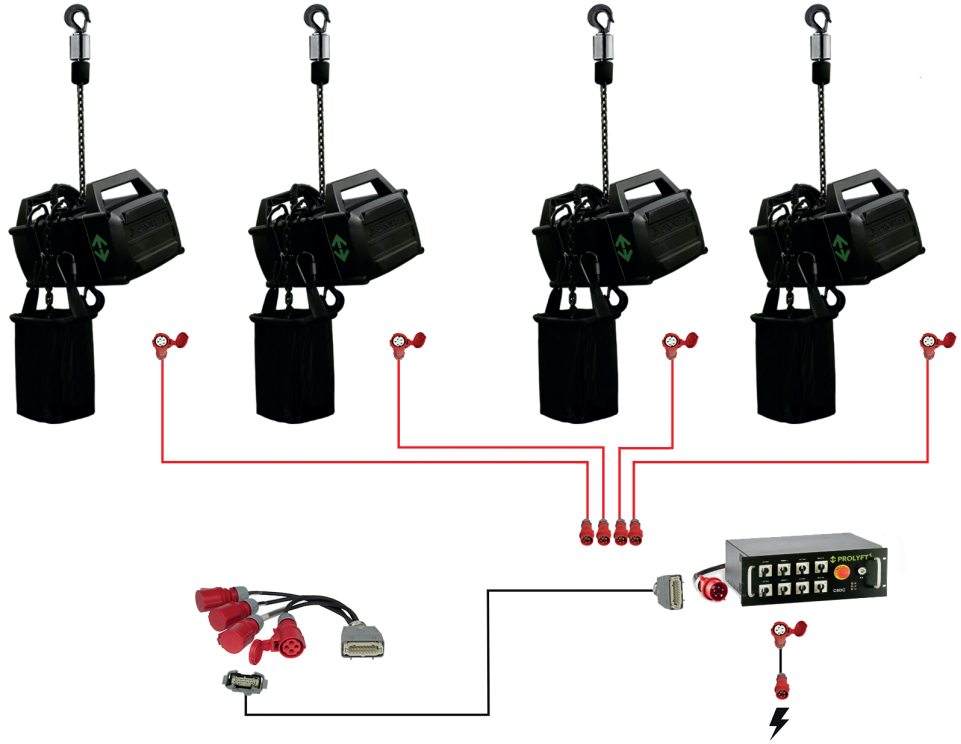

Direct control setup

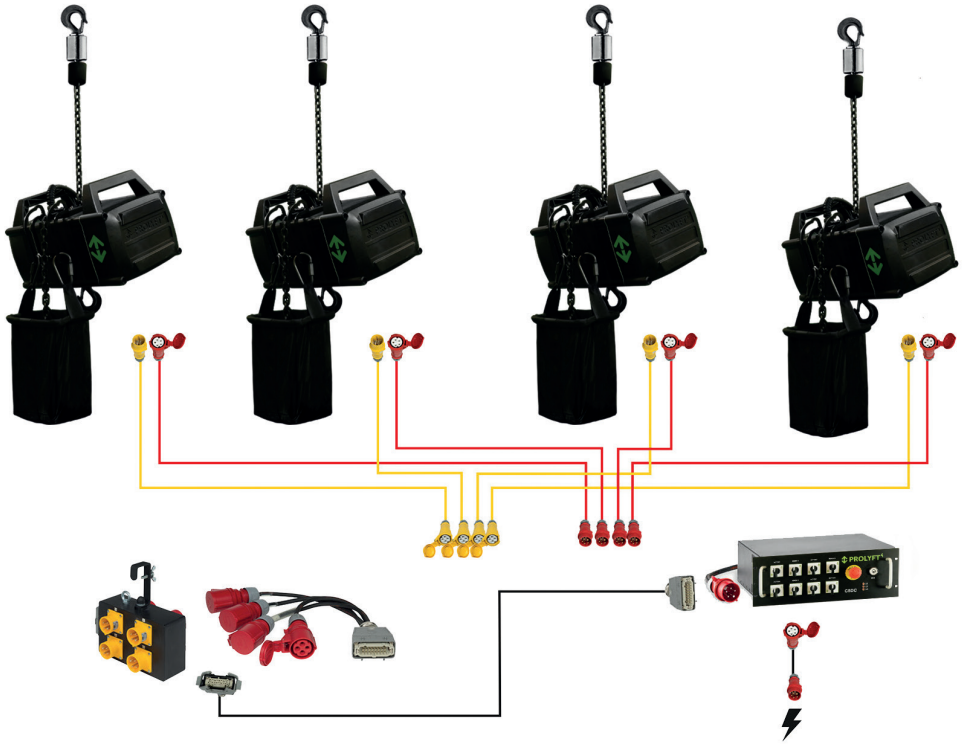

Low voltage setup

FLIGHTCASES

SIZES		
PNE-A-FC-250	FLIGHTCASE NERO 250KG	48x48x39
PNE-A-FC-500	FLIGHTCASE NERO 500KG	48x48x39
PNE-A-FC-1000	FLIGHCASE NERO 1T000KG	57x57x46
PNE-A-FC-2000	FLIGHTCASE NERO 2000KG	57x57x46

Solid flightcase made for functional use. Available in multiple colours; black, orange, red, blue, grey and white. Other colours available on request. Each Prolyft hoist has it's own Flightcase.

CHAINBAGS

SIZES					
Bag type	4x12mm 75%	5x15mm 75%	6x18mm 75%	7.1x20.5mm 75%	8x24mm 75%
PLA-10-S	40m	25m	20m	15m	10m
PLA-10-M	50m	30m	25m	20m	15m
PLA-10-L		75m	60m	30m	25m
PLA-10-XL			75m	65m	50m
PLA-10-XXL				80m	60m

Sturdy chainbags, with a perfect fit and reinforced bottom, to keep the chain secured in the bag, all tested 75% filled and a safetyfactor of 1:8. Available in 5 different sizes to fit the complete range.

CABLES

PLA-30-05

Power Cable 16A/400V/4p

Motor cable 16A, CEE 4p. To be used for direct controlled hoists. Available in several lenghts.

PLA-31-05

Control Cable Low Voltage Hoists

6A, CEE 4p. To be used for low voltage controlled hoists. Available in several lenghts.

PLA-32-05

Power Cable 32A/400V/5p

Main cable 32A, CEE 5p. To be used to connect your controls to the power system. Available in several lenghts.

PLA-33-05

Multi Cable, 16p. Harting

To be used to connect up to 4 hoists - in combination with the 4-way break-out or break-in. Available in several lenghts.

PLA-34-01

Break-in Cee-form to Harting, Direct Control

Adapter to connect a multi cable to 4 motor cables . 4 x 4p. Male CEE connector to female Harting connector.

PLA-34-02

Break-out Harting to CEE-form, Direct Control

Adapter to connect 4 motor cables to a multi cable. Male Harting connector to 4 x 4p. female CEE conector.

PLA-34-04

Break-out Harting to CEE-form, Low Voltage Control

Adapter to connect 4 motor cables to a multi cable. Male Harting connector to 4 x 4p. female CEE conector. For low voltage hoists.

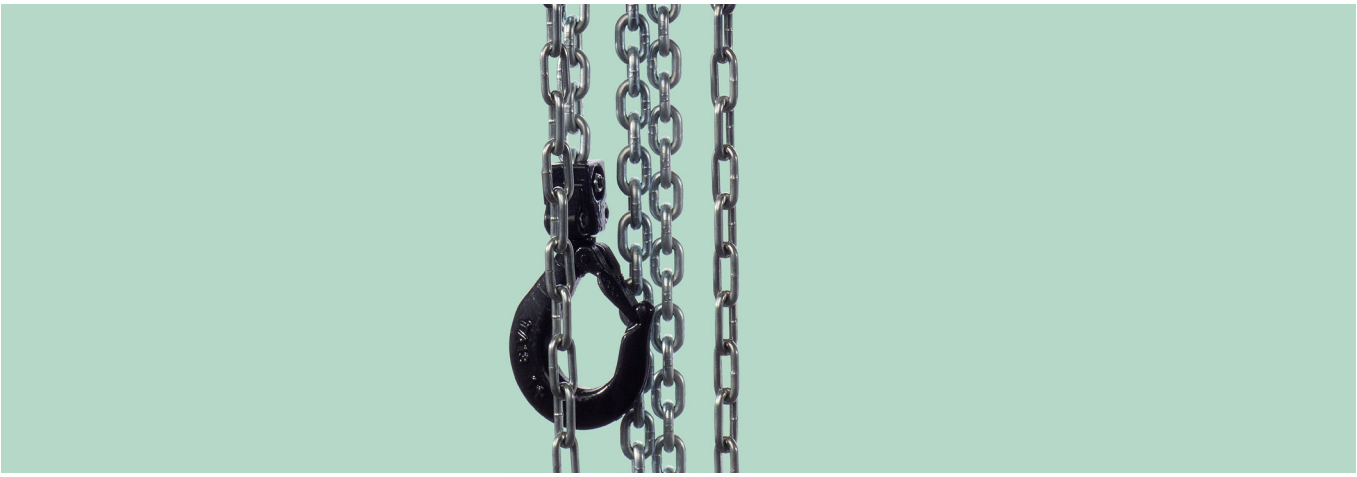

Photo: © Prolyte

PRODUCT FEATURES: PHC-500ST AND PHC-1000ST

- Available in 500 and 1000 kg load capacity versions.
- Standard lifting chain lengths: 10, 15, 20m, 25 m. (The hand chain is always two times the length of the load chain).
- Hand chain guide prevents toppling or jamming of the hand chain.
- High quality bearings to ensure smooth operation.
- Robust, black powder coated housing.
- Zinc plated and/or yellow chromatized brake parts and guide rollers.
- Zinc plated load chain and hand chain.
- Rotating hooks on housing and chain.

CHAIN BAG

The manual chain hoist can be equipped with standard chain bags fitting the chain or oversized chain bags that can also be used to transport the manual hoist.

QUALITY IN 2 VERSIONS

The manual chain hoists are available in a standard version and in a version with a rotatable hand chain guide. Both versions offer a 500 kg and a 1000 kg SWL capacity. These premium quality, basic hoists offer different chain lengths on both versions, optional black powder coating and a high quality zinc plated chain.

OPERATES FROM ANY POSITION

Using the rotatable hand chain guide the operator can work from any position, being able to follow and operate from any work position. This allows the operator to stand and work outside the danger zone near the load. The rotatable hand chain guide makes this hoist type specifically suited for tower and roof system applications, where the hoist is used in an inverted position.

PRODUCT FEATURES: PHC-500RHG AND PHC-1000RHG SERIES

- Available in 500 and 1000 kg load capacity versions.
- 360 degree rotating hand chain guide.
- High quality and easy serviceable brake system.
- Zinc plated and/or yellow chromatized brake parts and guide rollers.
- Zinc plated load chain and hand chain.
- Chain guide and gearbox almost completely closed for maximum protection.
- Rotating hooks on house and chain.
- Available chain length: The RHG series hand chain hoist can be supplied with any preferred amount of load and hand chain. Used in combination with most of the MPT towers the hoist will be configured with 15 m load chain and 3 m hand chain (PHC-500RHG-0315).

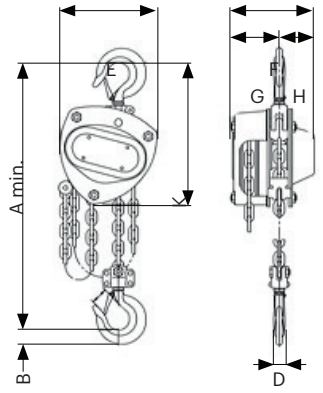

PHC-500ST	PHC-1000ST-1010
Manual Chain Hoists 500 kg and 1000 kg	

	A	B	D	E	F	G	H	K
PHC-500ST	350	21	16	145	140	80	60	240
PHC-1000ST	380	28	20	158	155	87	68	270

	Load capacity	Chain size	Lift per 1m hand chain overhaul	Pull on hand chain at WLL	Weight
PHC-500ST-1515	500 kg	5 x 15 mm	26 mm	210 N	27 kg
PHC-1000ST-1515	1000 kg	6 x 18 mm	24 mm	240 N	37 kg

SERVICE POINT DATABSE

Prolyft has its own unique database. All hoist that left Prolyft are in the database and trackable. The database is a unique tool for the Prolyft Service Points to certify and service all the hoist. The test can be done in a physical test rig or with a mobile set. This means that not only the hoist in the rental stock can be certified but also the hoist in a fixed installation without taking it complete out.

The Prolyft database is web-based and accessible from ahy place where you have access to the internet. It is available for use in different devices, such as mobile phones or tablets. You can add any kind of files to the specific hoist.

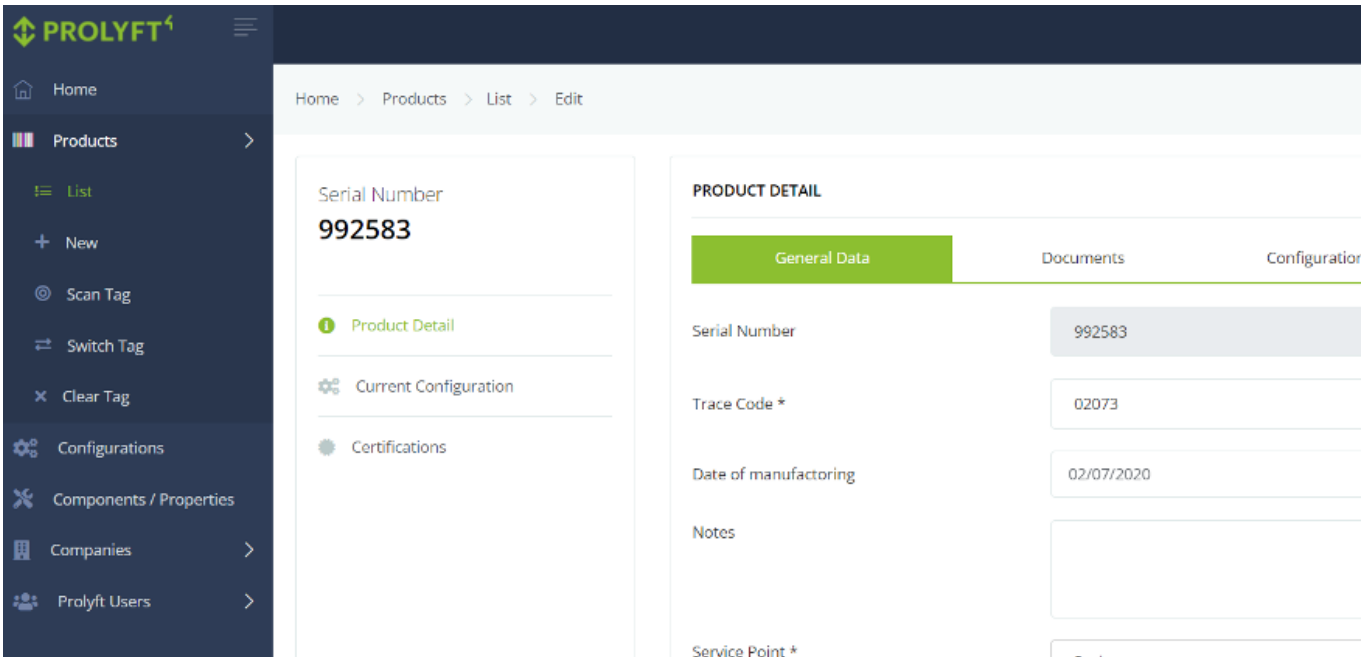

PROLYFT

Photo: PSI, Ireland

PROLYTE
Feel. Fantastic.

Prolyte Campus

Prolyte Campus is a Prolyte initiative to support its customers with the best and most up-to-date knowledge available. Providing the tools and training to use the Prolyte products safely and in compliance with applicable standards and regulations will help you perform better. Prolyte Campus offers a complete program of learning activities to create awareness on the safe use of Prolyte products.

Providind the knowledge to let your business grow

As a manufacturer, Prolyte always feels the responsibility to supply knowledge as integrated part of its products. Creating the awareness that safe working practices are key to responsible ownership is one of our goals.

Placing all our training initiatives under one umbrella is a means to facilitate access to this knowledge base for all our customers and users. Transferring knowledge and creating a dialogue with technicians worldwide, finding their needs and sharing experiences is a valuable base for creating solutions that work and help you grow your business.

What does Prolyte campus offers?

Sharing knowledge is the pivoting point, in whatever way is needed to get the message across. As a start the Prolyte Campus will offer a mix of online, printed and seminar based means of knowledge transfer. Existing activities, like the BlackBook, How to video's, Rigging Courses and Seminar possibilities, will be continued.

Prolyte
Industriepark 9
9351 PA Leek
Netherlands

T: +31-594 851 515
sales@prolyte.com

Area Four Industries

www.prolyte.com